Narrowband Interference Mitigation for Noncoherent UWB

Daniel Arnitz

Signal Processing and Speech Communication Laboratory
Graz University of Technology, Austria, Europe

Advanced Signal Processing – May 25, 2009

Outline

Introduction

Basics / Overview
- What is "Narrowband" Interference?
- Mitigation Strategies

Mitigation Strategies (Details)
- Direct Approaches (Filters, Feedback Loops)
- NBI-by-NBI Mitigation: Coding/Postprocessing
- NBI-by-* Mitigation: Parallel Multichannel AcR

Conclusion and References

Intro – What are we talking about?

Noncoherent UWB

... Autocorrelation Receiver (AcR) or Energy Detector (ED)

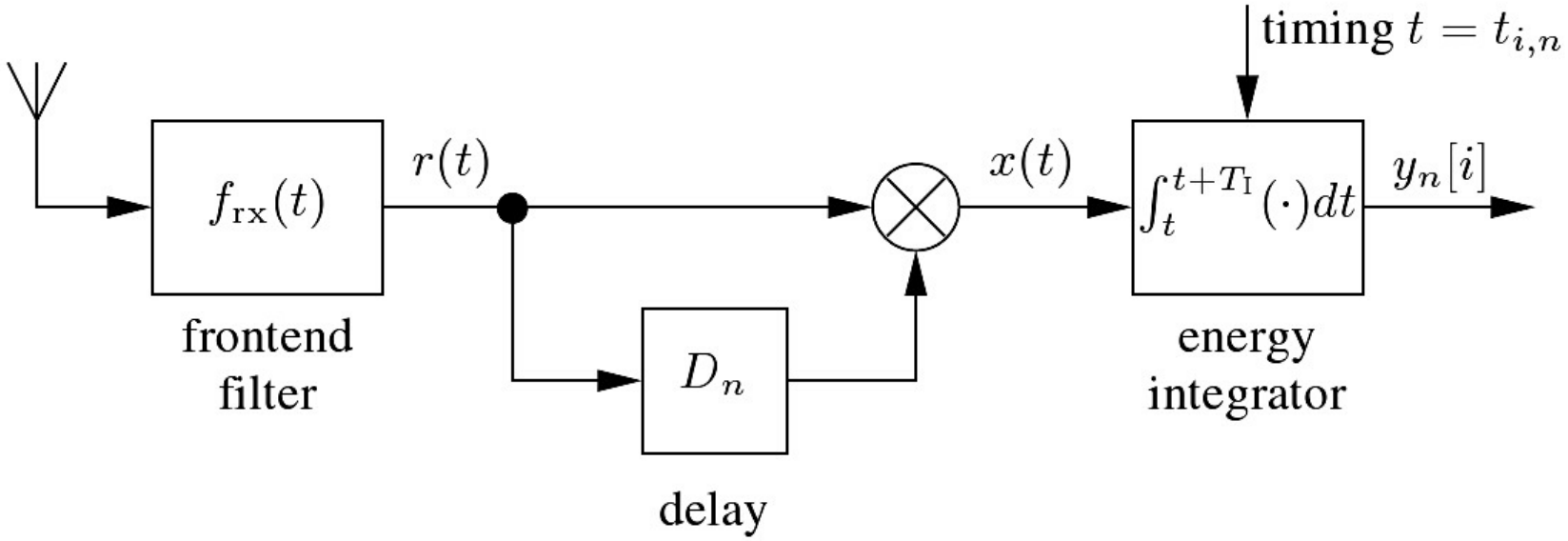

General Reference

[1] K. Witrisal, "A Tutorial on Noncoherent UWB Systems," Ch. 1 *in Proc. Design and Analysis of Noncoherent UWB Transceivers*, September 2008 (Habilitation Thesis, Graz University of Technology).

Intro – Interference Sources

"UWB frequency bands"

- European: $6-8.5\,\text{GHz}$ @ $-41.3\,\text{dBm/MHz}$
- American: $3.1-10.6\,\text{GHz}$ @ $-41.3\,\text{dBm/MHz}$

Most prominent interference sources

- wireless devices (IEEE 802.11): $2.4, 3.6, 5-6\,\text{GHz}$ @ $20-30\,\text{dBm}$ per device
- mobile phones: $1-2\,\text{GHz}$ @ $33\,\text{dBm}$ per device

... THUS

- $-41.3\,\text{dBm/MHz}$, $500\,\text{MHz} \Rightarrow -14.3\,\text{dBm}$
- up to $-50\,\text{dB}$ signal to interference ratio

Intro – Interference Sources

Inband

- cannot be filtered without loosing signal energy
- effect of interference depends on
  - receiver architecture / mitigation techniques
  - structure of the interference (bandwidth, correlation)
  - power of the interference (saturation effects)

Out-of-Band

- high demand on filters (att. 50 dB for SIR = 0 dB)
- nonlinear LNA $\Rightarrow$ intermodulation products can be inband

Vulnerabilities of noncoherent receivers

- interference in signal *and* reference
- multiplication creates cross-terms

Intro – Narrowband Interference Using ED Receivers

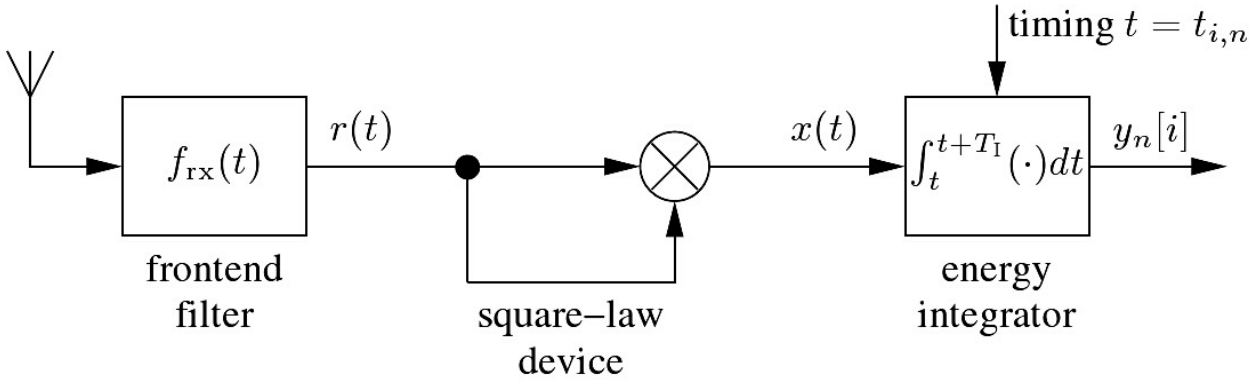

$$r(t) = \underbrace{s(t)}_{\text{signal "UWB"}} + \underbrace{\beta(t)}_{\text{interference "NBI"}} + \underbrace{n(t)}_{\text{noise}}$$

$$\begin{aligned} x(t) &= r(t)^2 \\ &= s(t)^2 + \beta(t)^2 + n(t)^2 + 2s(t)n(t) + 2s(t)\beta(t) + 2\beta(t)n(t) \end{aligned}$$

Intro – Narrowband Interference Using ED Receivers

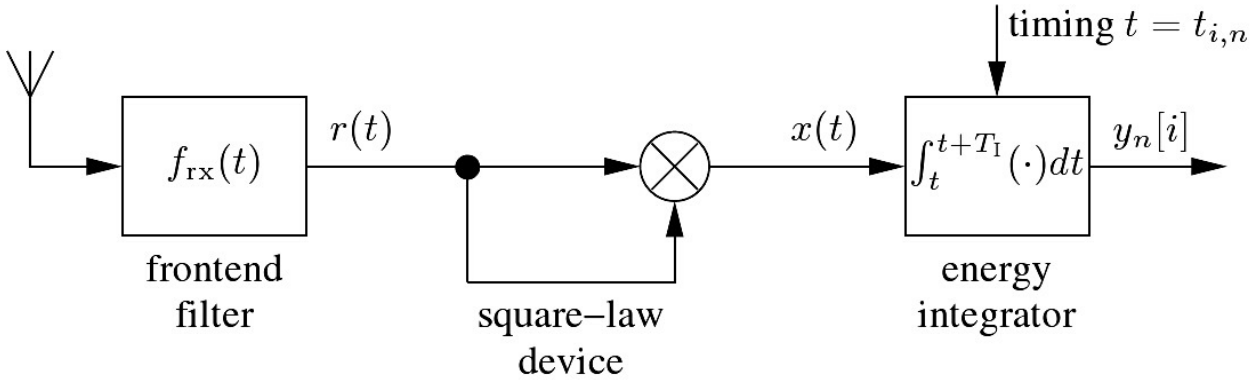

$$r(t) = \underbrace{s(t)}_{\text{signal "UWB"}} + \underbrace{\beta(t)}_{\text{interference "NBI"}} + \underbrace{n(t)}_{\text{noise}}$$

$$\begin{aligned} x(t) &= r(t)^2 \\ &= s(t)^2 + \underbrace{\beta(t)^2}_{\text{NBI-by-NBI}} + n(t)^2 + 2s(t)n(t) + 2s(t)\beta(t) + 2\beta(t)n(t) \end{aligned}$$

Intro – Narrowband Interference Using ED Receivers

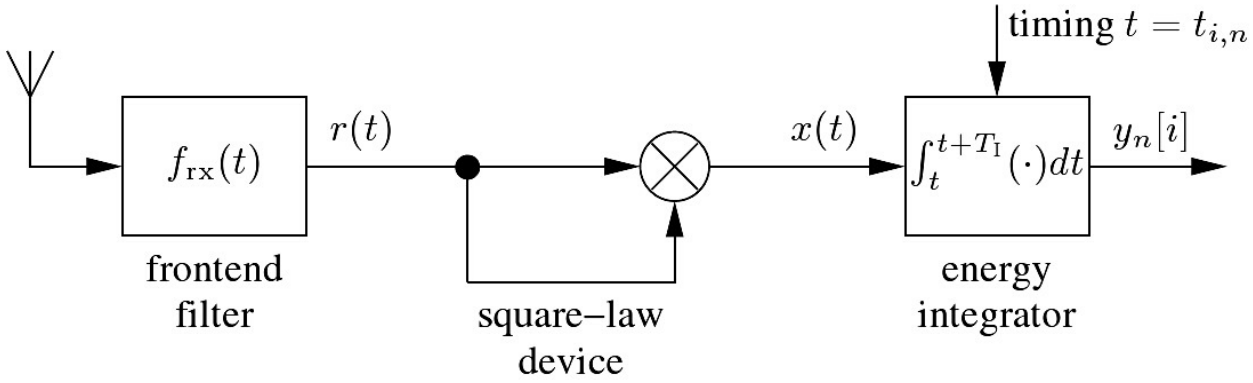

$$r(t) = \underbrace{s(t)}_{\text{signal "UWB"}} + \underbrace{\beta(t)}_{\text{interference "NBI"}} + \underbrace{n(t)}_{\text{noise}}$$

$$\begin{aligned} x(t) &= r(t)^2 \\ &= s(t)^2 + \underbrace{\beta(t)^2 + n(t)^2 + 2s(t)n(t) + 2s(t)\beta(t) + 2\beta(t)n(t)} \end{aligned}$$

Intro – Narrowband Interference Using ED Receivers

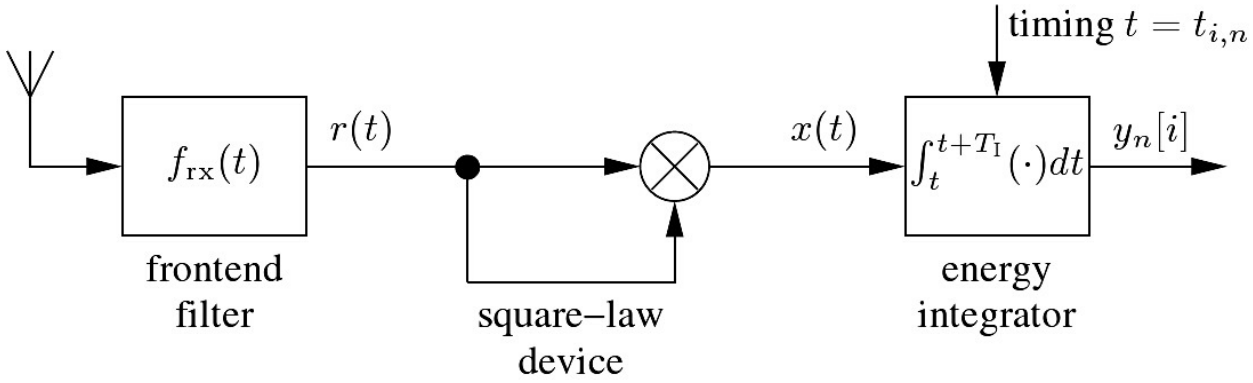

$$r(t) = \underbrace{s(t)}_{\text{signal "UWB"}} + \underbrace{\beta(t)}_{\text{interference "NBI"}} + \underbrace{n(t)}_{\text{noise}}$$

$$\begin{aligned} x(t) &= r(t)^2 \\ &= s(t)^2 + \underbrace{\beta(t)^2 + n(t)^2 + 2s(t)n(t) + 2s(t)\beta(t) + 2\beta(t)n(t)}_{\text{NBI-by-*}} \end{aligned}$$

Introduction

Basics / Overview
- What is "Narrowband" Interference?
- Mitigation Strategies

Mitigation Strategies (Details)
- Direct Approaches (Filters, Feedback Loops)
- NBI-by-NBI Mitigation: Coding/Postprocessing
- NBI-by-* Mitigation: Parallel Multichannel AcR

Conclusion and References

Basics – "Narrowband" Interference

- bandwidth of interference small compared to UWB bandwidth ($W_\beta \ll 1/T_I$)
- "symbol" duration (for some systems: integration time T_I) smaller than coherence time of interference

---

For example: Block spectrum (noise) with bandwidth W_β and power P_β at carrier frequency f_β (typ. OFDM; e.g., WLAN):

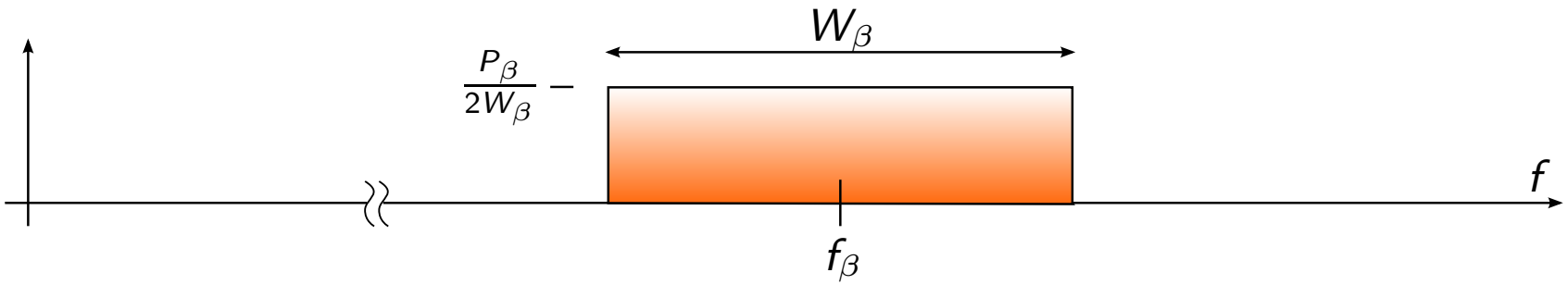

$$\beta(t) = \sqrt{2}\mathrm{Re}\left\{\alpha(t)e^{\jmath(2\pi f_\beta t+\theta)}\right\}$$

$$R_{\beta\beta}(\tau) = \mathrm{E}\{\beta(t+\tau)\beta(t)\} = P_\beta \cos(2\pi f_\beta \tau)\mathrm{sinc}(W_\beta \tau)$$

Intro – Narrowband Interference Using AcR Receivers

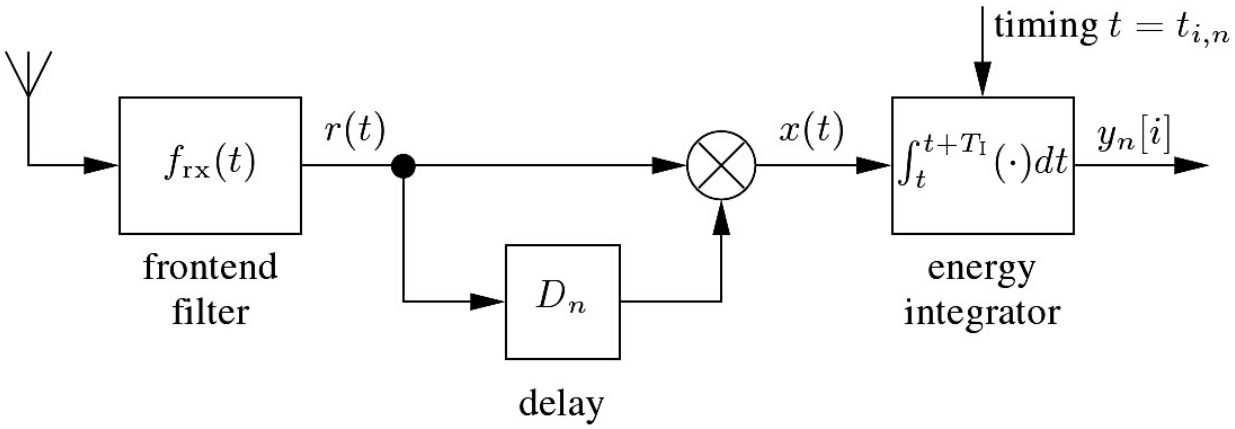

$$r(t) = s(t) + \beta(t) + n(t) \qquad x(t) = r(t)r(t - D_n) + \ldots$$

Intro – Narrowband Interference Using AcR Receivers

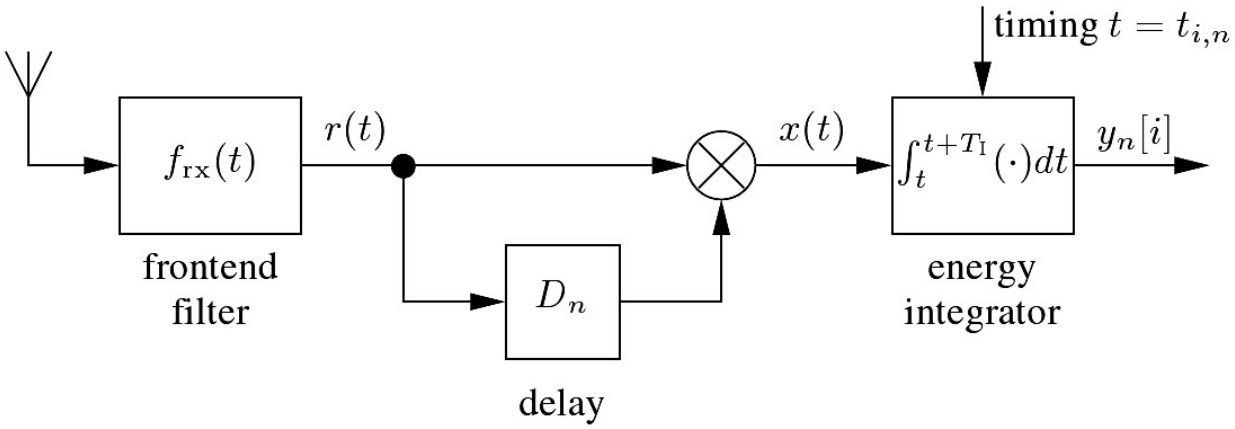

$$r(t) = s(t) + \beta(t) + n(t) \qquad x(t) = r(t)r(t - D_n) + \dots$$

$$\beta[n] = \int_{t_{i,n}}^{t_{i,n}+T_I} \beta(t + D_n)\beta(t)dt = \cdots =$$

$$= \widetilde{\phi}_\alpha(t_{i,n}, D_n) \int_{t_{i,n}}^{t_{i,n}+T_I} \cos(\cdot)dt + \phi_\alpha(t_{i,n}, D_n)\, T_I \cos(2\pi f_\beta D_n)$$

Intro – Narrowband Interference Using AcR Receivers

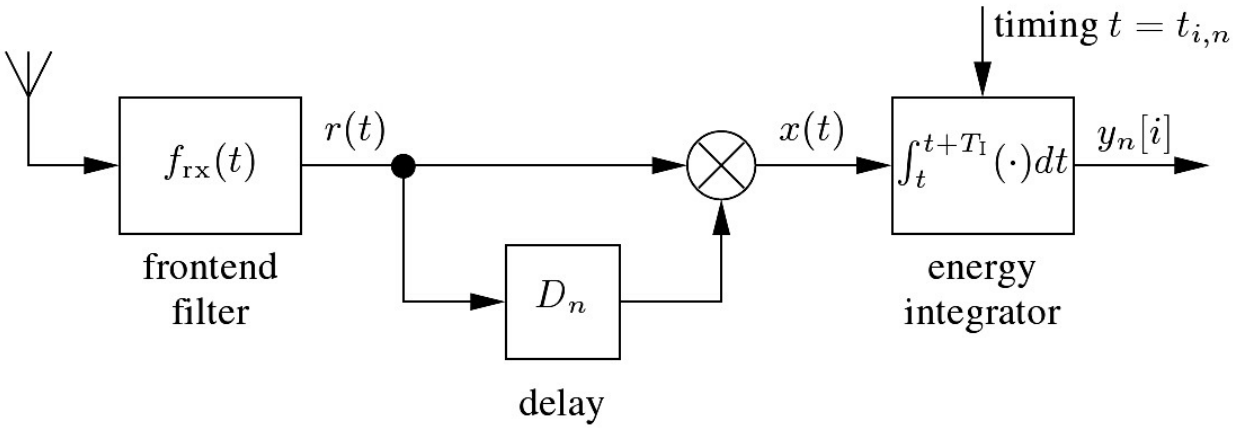

$$r(t) = s(t) + \beta(t) + n(t) \qquad x(t) = r(t)r(t - D_n) + \dots$$

$$\beta[n] = \int_{t_{i,n}}^{t_{i,n}+T_I} \beta(t + D_n)\beta(t)dt = \cdots =$$

$$= \widetilde{\phi}_\alpha(t_{i,n}, D_n) \int_{t_{i,n}}^{t_{i,n}+T_I} \cos(\cdot)dt + \phi_\alpha(t_{i,n}, D_n)\, T_I \cos(2\pi f_\beta D_n)$$

Introduction

Basics / Overview
- What is "Narrowband" Interference?
- Mitigation Strategies

Mitigation Strategies (Details)
- Direct Approaches (Filters, Feedback Loops)
- NBI-by-NBI Mitigation: Coding/Postprocessing
- NBI-by-* Mitigation: Parallel Multichannel AcR

Conclusion and References

Basics – Where Mitigation is Possible

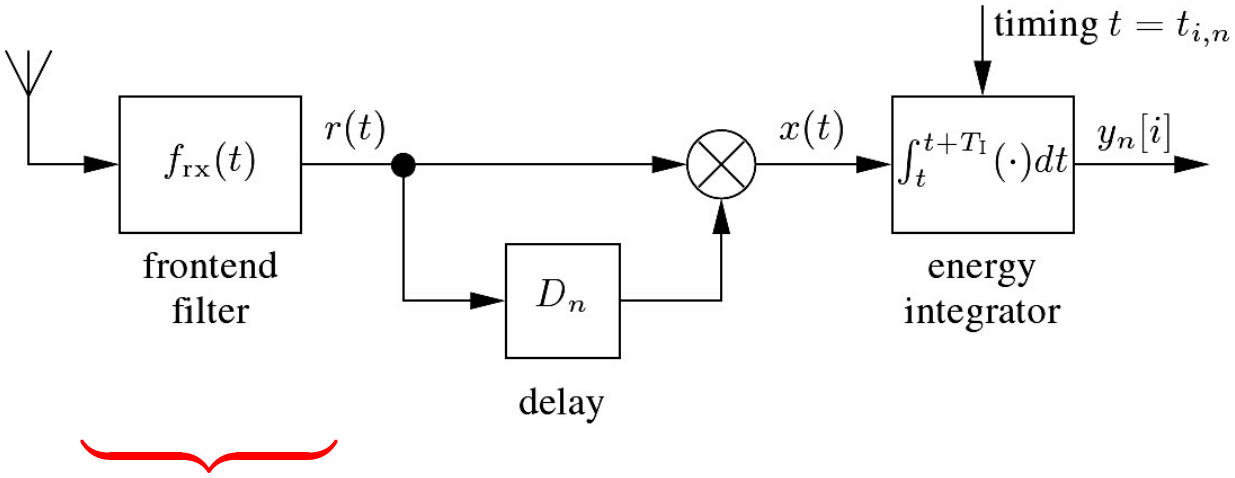

Frontend filter

... frontend filter is pulse shape ⇒ choose shape i.o.t. place nulls at interference (or: multichannel in f-domain; skip channels)

\+ relatively simple to implement for known (static) interference

– attenuation may be insufficient

– signal energy lost if interference not at nulls (MPP)

Basics – Where Mitigation is Possible

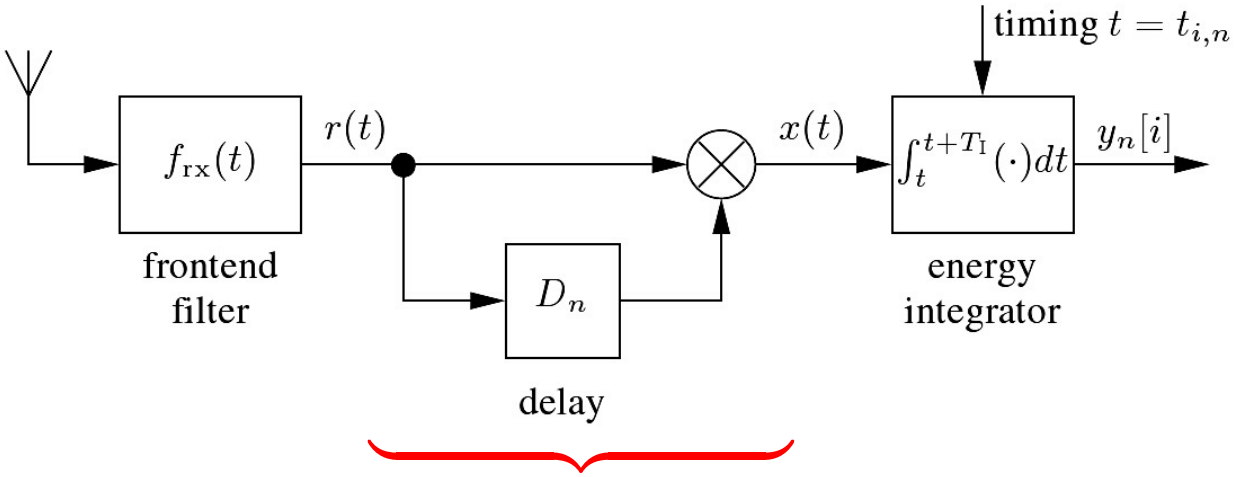

Delay

... choose delay(s) i.o.t. minimize/cancel interference

\+ very good suppression of NBI (att. up to 50 dB)

... also able to cancel NBI-by-UWB and NBI-by-noise terms

– multichannel: additional complexity (parallel correlators)

– needs a-priori statistics or long training sequences

Basics – Where Mitigation is Possible

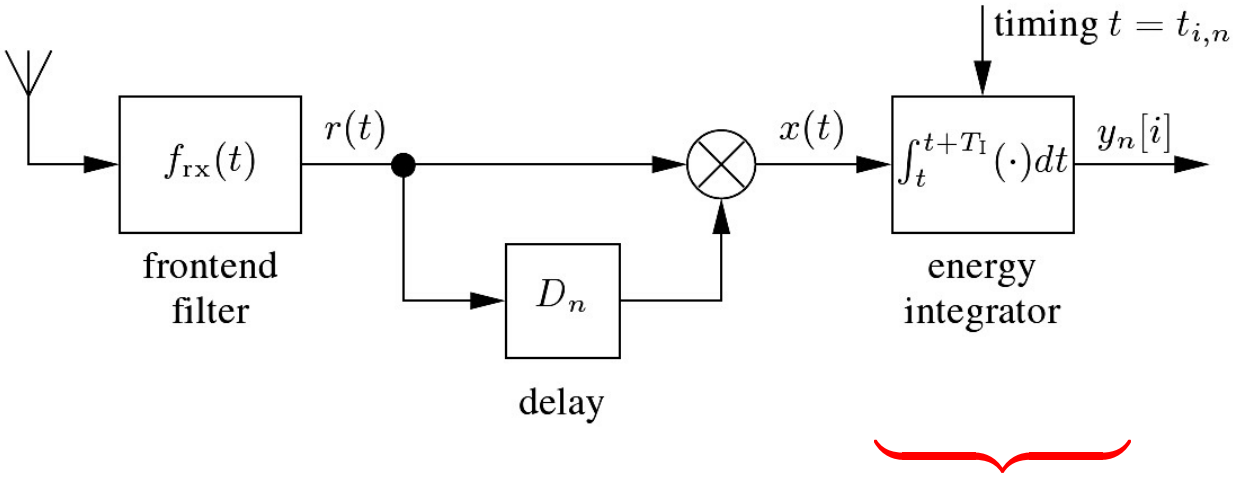

Energy integrator

... choose integration time i.o.t. minimize/cancel interference

\+ works well for PPM and very narrowband interference

– performance drops drastically for more wideband distortions

– integration time can't be chosen arbitrarily ($\rightarrow \tau_{\mathrm{RMS}}$)

Basics – Where Mitigation is Possible

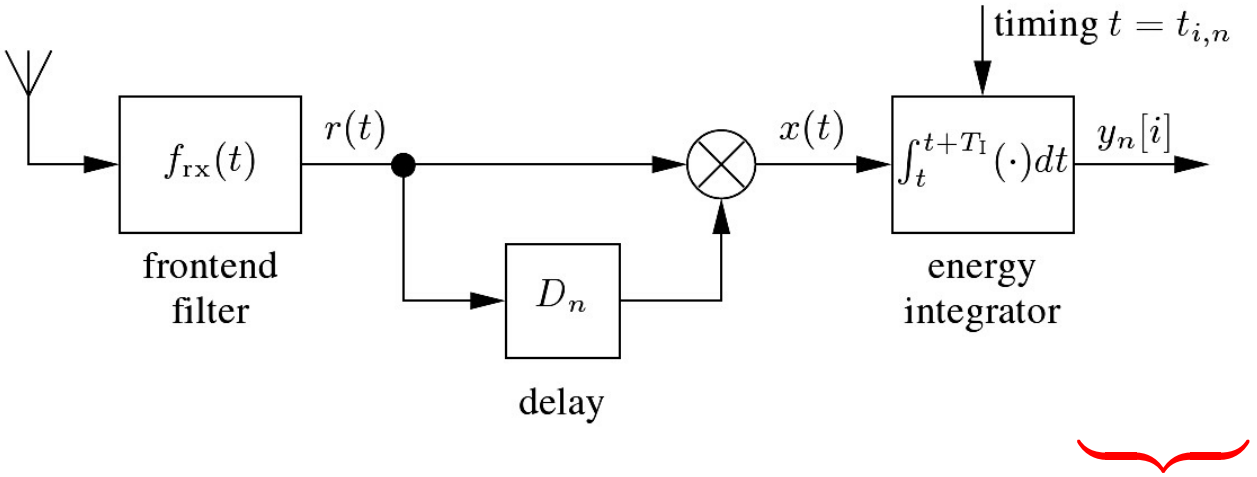

Coding

... use differential coding or PPM ⇒ constant distortion cancels

\+ simple to implement

– performance drops very fast for increased bandwidth
(not "constant" distortion any more)

– (data rate and/or power efficiency due to ref. pulses)

Basics – Mitigation Ideas and Problems

Summing up the ideas

- modify receiver i.o.t. create high attenuation at interference (filter, combiner, or coding)
- use statistics that are different for UWB and NBI (separate in signal space)
  - use correlation in NBI-by-* terms to identify ("narrowband")

Problems and drawbacks

- NBI-by-UWB terms hard to predict (independent RV)
- NBI mitigation might deteriorate performance if no interference is present
  - noise amplification due to overmodeling
  - creates and SNR-dependent lower bound for SIR$\rightarrow\infty$

Introduction

Basics / Overview
- What is "Narrowband" Interference?
- Mitigation Strategies

Mitigation Strategies (Details)
- Direct Approaches (Filters, Feedback Loops)
- NBI-by-NBI Mitigation: Coding/Postprocessing
- NBI-by-* Mitigation: Parallel Multichannel AcR

Conclusion and References

Mitigation – Frequency-Channelized Parallel AcR

... Lei Feng, Won Namgoong (Univ. S. California, 2006) [2]
... Marco Pausini, Gerard J. Janssen (Delft UT, 2006) [3]

Idea:

- divide UWB bandwidth into subchannels; skip impaired
- use an analog filterbank w. downconversion and lowpass filters plus digital perfect reconstruction ([2])
- use multiple bandpass filters / correlators / integrators ([3])

Problems and drawbacks:

- signal energy is lost by skipping channel with interference
- implementational issues (in add. to parallel structures)
  - bank of narrowband filters
  - creation of subband carriers for downconversion

Mitigation – Quadrature Downconverter

... Simon Lee, Sumit Bagga, Wouter Serdijn (Delft UT, 2004) [4]

Idea:

- downconvert the UWB signal to DC
- sub-Nyquist sampling $\Rightarrow$ collapse UWB bandwidth to $<$ GHz
- use TR-AcR; both pulses will be distorted (collapsed) equally
- "new" Nyquist rate defined by pulse repetition (not PW)
- use baseband notch filters to remove NBI

About the paper:

- did not consider multiple / more wideband NBI
- did not consider lost signal power (collapsed spectrum!)

Mitigation – Reference Pulse Averaging (FB Loop)

... Farid Dowla, Faranak Nekoogar, Alex Spiridon
(Lawrence Livermore National Laboratory, 2004) [5]

Idea:

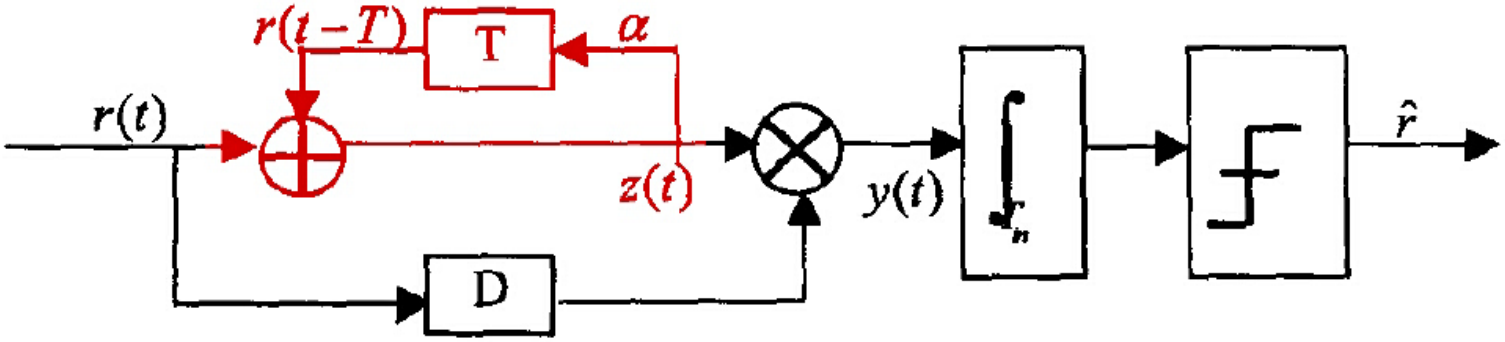

Problems and drawbacks:

- implicitly assumes uncorrelated NBI (if corr: NBI amplified)
- very long delay (analog implementation??)

Introduction

Basics / Overview
- What is "Narrowband" Interference?
- Mitigation Strategies

Mitigation Strategies (Details)
- Direct Approaches (Filters, Feedback Loops)
- NBI-by-NBI Mitigation: Coding/Postprocessing
- NBI-by-* Mitigation: Parallel Multichannel AcR

Conclusion and References

Mitigation – BPPM for ED Receivers

... Christoph Steiner, Armin Wittneben (ETH Zürich, 2007) [6]

Idea:

- BPPM: decision variable $z[i] = y_1[i] - y_2[i]$ w. zero threshold
- interference cancels if $\beta_1[i] \approx \beta_2[i]$ (within coherence time)
- processing gain (attenuation of interference) depends on integration time

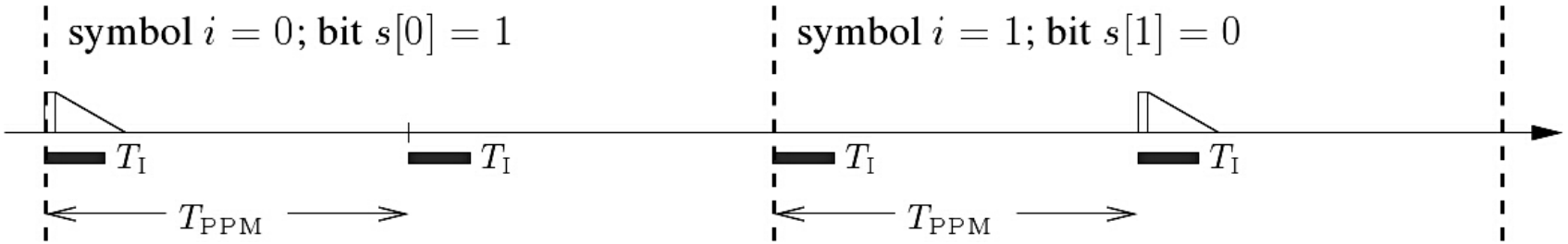

Mitigation – BPPM for ED Receivers

About the paper:

- consider no noise, no ISI
- considers all mixture terms (NBI-by-NBI, NBI-by-UWB, . . .)
- simple analytical bounds for narrowband interferences

Results in a nutshell:

- NBI-by-UWB terms dominate for very narrowband,
- NBI-by-NBI terms dominate for more wideband interference
- suppression better for inband interference
- processing gain deteriorates for increasing bandwidth

Mitigation – BPPM for ED Receivers

Processing gain vs. interference bandwidth:

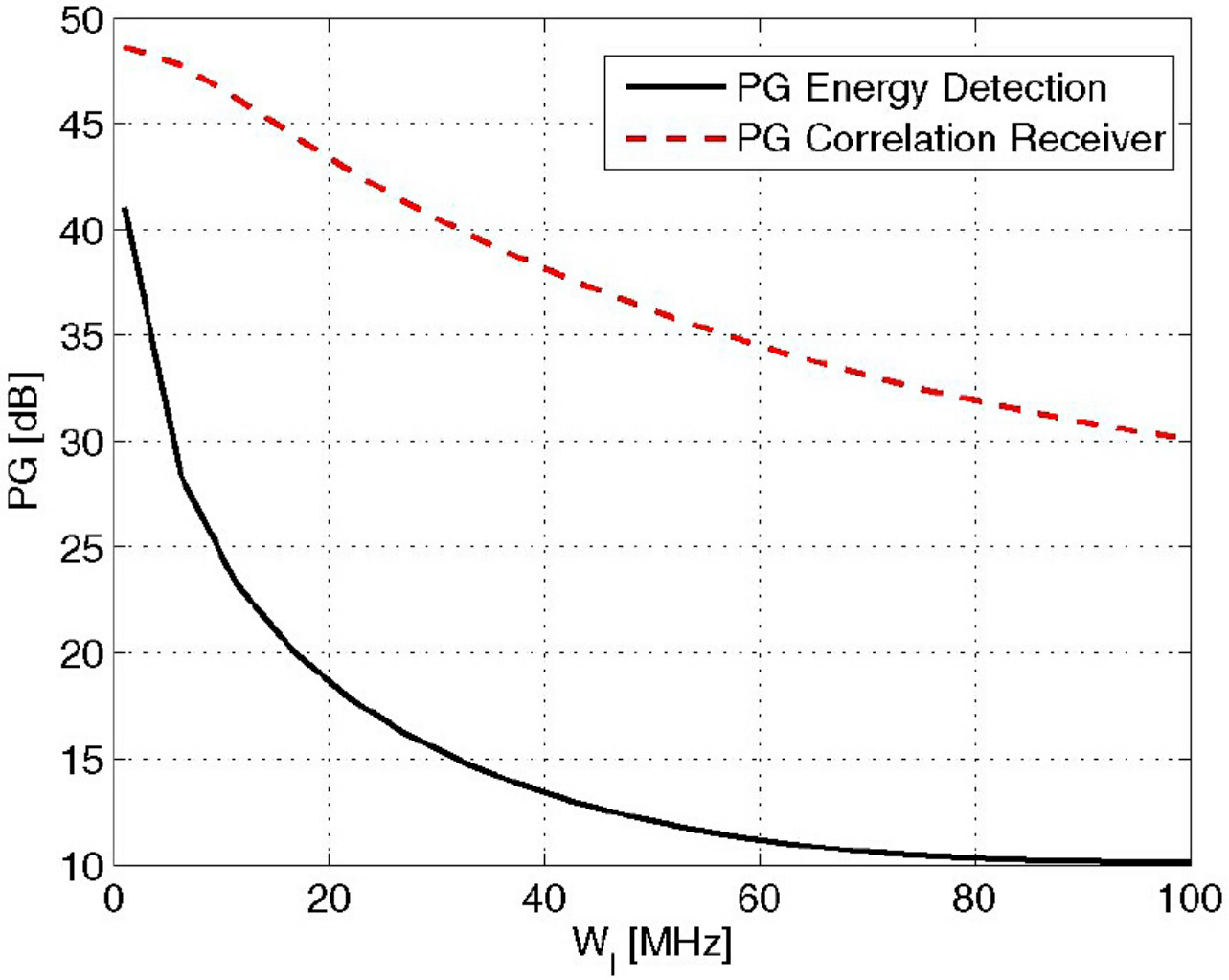

Mitigation – Time/Delay Hopping Code (AcR)

... Marco Pausini, Gerard J. Janssen (Delft UT, 2005) [7]

Idea:

- send consecutive pulse pairs with delay-hopping (ref pulses)
- decision variable: again subtraction
- interference cancels if within coherence time (like above)

Results in a nutshell:

... considered a single-tone interference, no noise

- NBI-by-NBI terms (bias in decision variable $z[i]$) can be cancelled without knowledge of f_β
- NBI-by-UWB terms (variance of $z[i]$) can only be cancelled with accurate timing and knowledge of f_β

Mitigation – Signal Processing Scheme

... Quang Hieu Dang, Alle-Jan van der Veen (Delft UT, 2006) [8]

Idea:

- assume coherence of the NBI over some samples
- use digital signal processing to remove NBI-by-NBI term
  (in sampled signal after integration)

Results in a nutshell:

- up to 5 dB processing gain for NBI-by-NBI term
- works best for SIR $\approx -25 \ldots -5$ dB
- needs training symbols for initial channel estimate
- deteriorates BER drastically if no interference is present

Mitigation – Signal Processing Scheme

BER vs. SIR with / without mitigation:

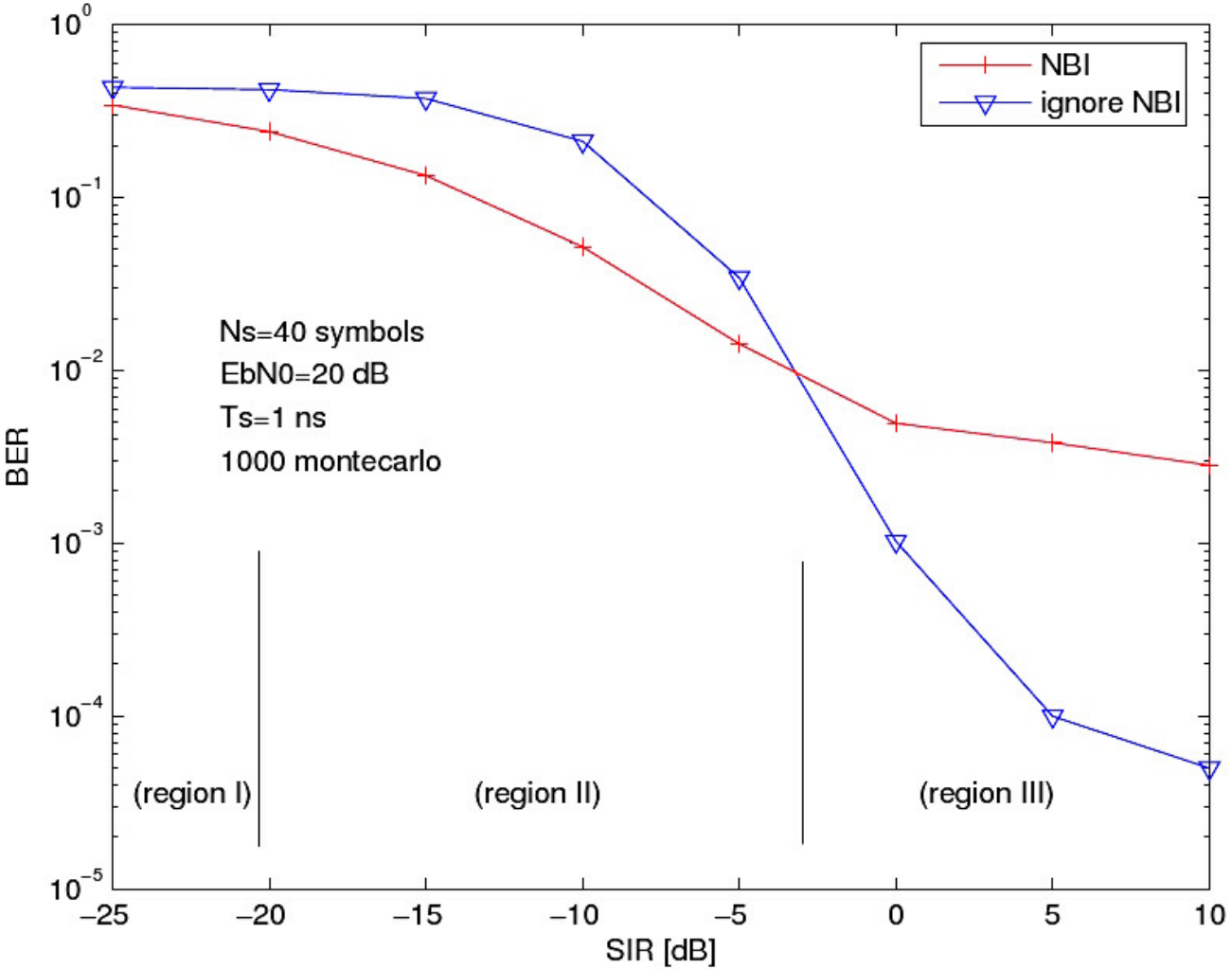

Introduction

Basics / Overview
- What is "Narrowband" Interference?
- Mitigation Strategies

Mitigation Strategies (Details)
- Direct Approaches (Filters, Feedback Loops)
- NBI-by-NBI Mitigation: Coding/Postprocessing
- NBI-by-* Mitigation: Parallel Multichannel AcR

Conclusion and References

Mitigation – Parallel Multichannel AcR

... Klaus Witrisal, Yohannes D. Alemseged (Graz UT, 2005...08) [9, 10, 11, 12]

Idea:

- multichannel AcR with different delays $D_n \Rightarrow$ vector RX
- use weighted combiners for decision variable

Mitigation – Parallel Multichannel AcR

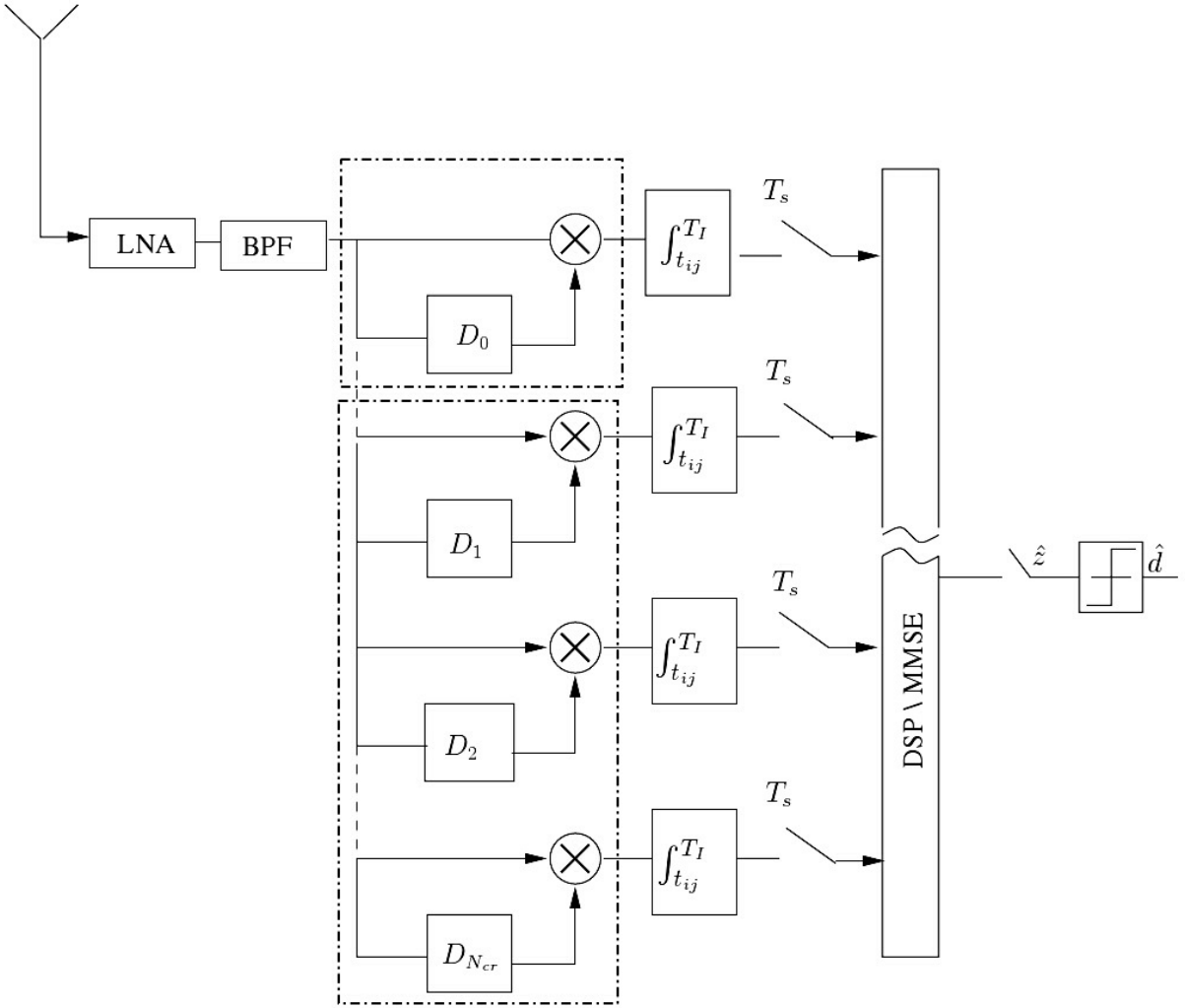

Mitigation – Parallel Multichannel AcR

... Klaus Witrisal, Yohannes D. Alemseged (Graz UT, 2005...08) [9, 10, 11, 12]

Idea:

- multichannel AcR with different delays $D_n \Rightarrow$ vector RX
- use weighted combiners for decision variable
- identify cosine in sampled signal vector and suppress it

Which cosine???

Mitigation – Parallel Multichannel AcR

... Klaus Witrisal, Yohannes D. Alemseged (Graz UT, 2005...08) [9, 10, 11, 12]

Idea:

- multichannel AcR with different delays $D_n \Rightarrow$ vector RX
- use weighted combiners for decision variable
- identify cosine in sampled signal vector and suppress it

Which cosine???

$$\beta[n] = \widetilde{\phi}_\alpha(t_{i,n}, D_n) \int_{t_{i,n}}^{t_{i,n}+T_I} \cos(\cdot)dt + \overbrace{\phi_\alpha(t_{i,n}, D_n) T_I \cos(2\pi f_\beta D_n)}$$

Mitigation – Parallel Multichannel AcR

About the papers:

- use delay-hopping TR-AcR and training sequences ([9, 11])
  - NBI-by-NBI and NBI-by-noise estimated in absence of data pulses (idle times)
- works if NBI sampled within coherence time $\Rightarrow \max(D_n)$
- different post-processing methods (linear combiners)

Results in a nutshell:

- up to 20 dB processing gain for [9, 10], 50 dB for [11]
- asymptotically removes NBI for large number of channels
- cancelling NBI-by-NBI also cancels NBI-by-UWB and NBI-by-noise terms under some conditions [11, 12]

Mitigation – Parallel Multichannel AcR

Power of cross-terms normalized to UWB power

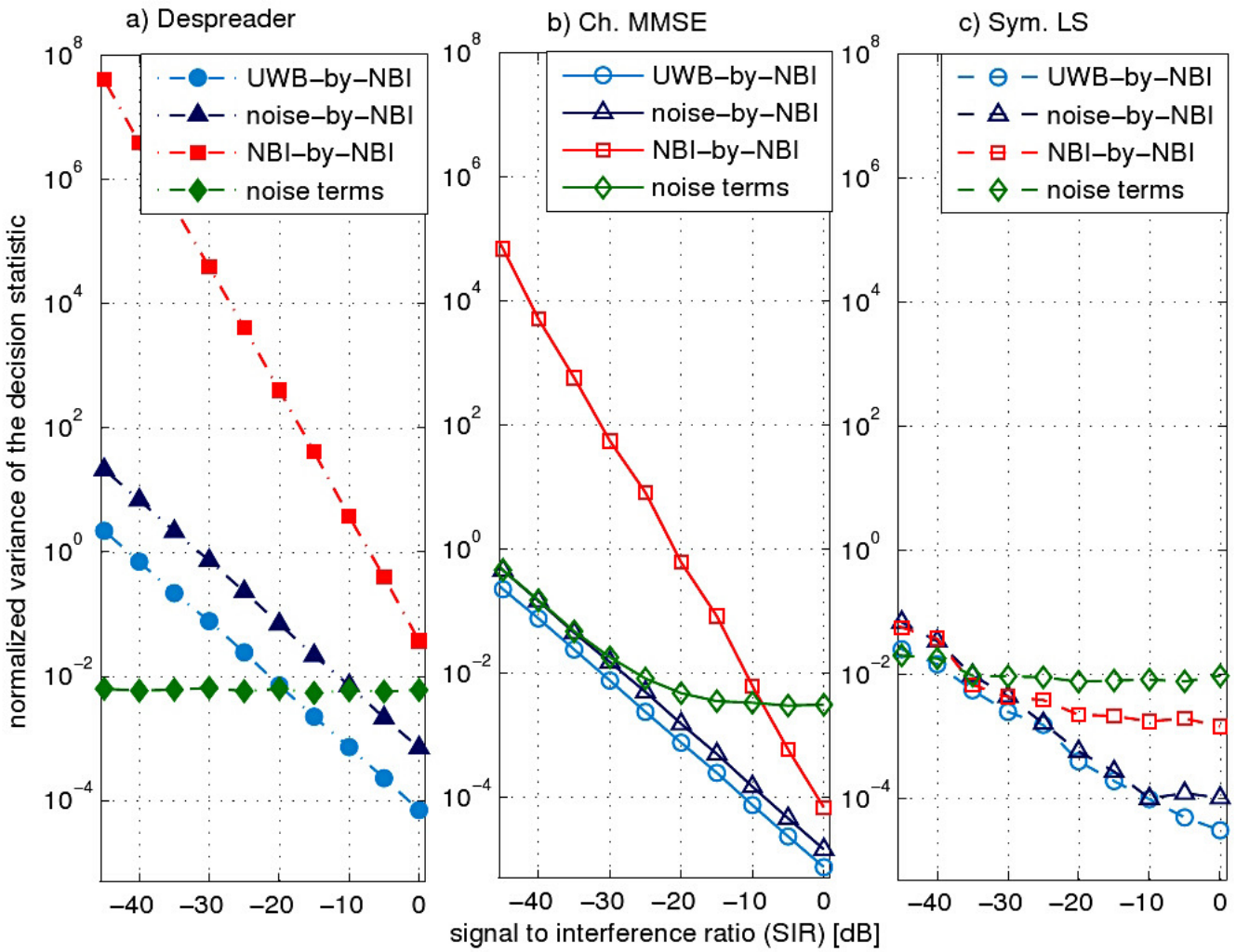

Mitigation – Parallel Multichannel AcR

BER vs. SIR for different combiners

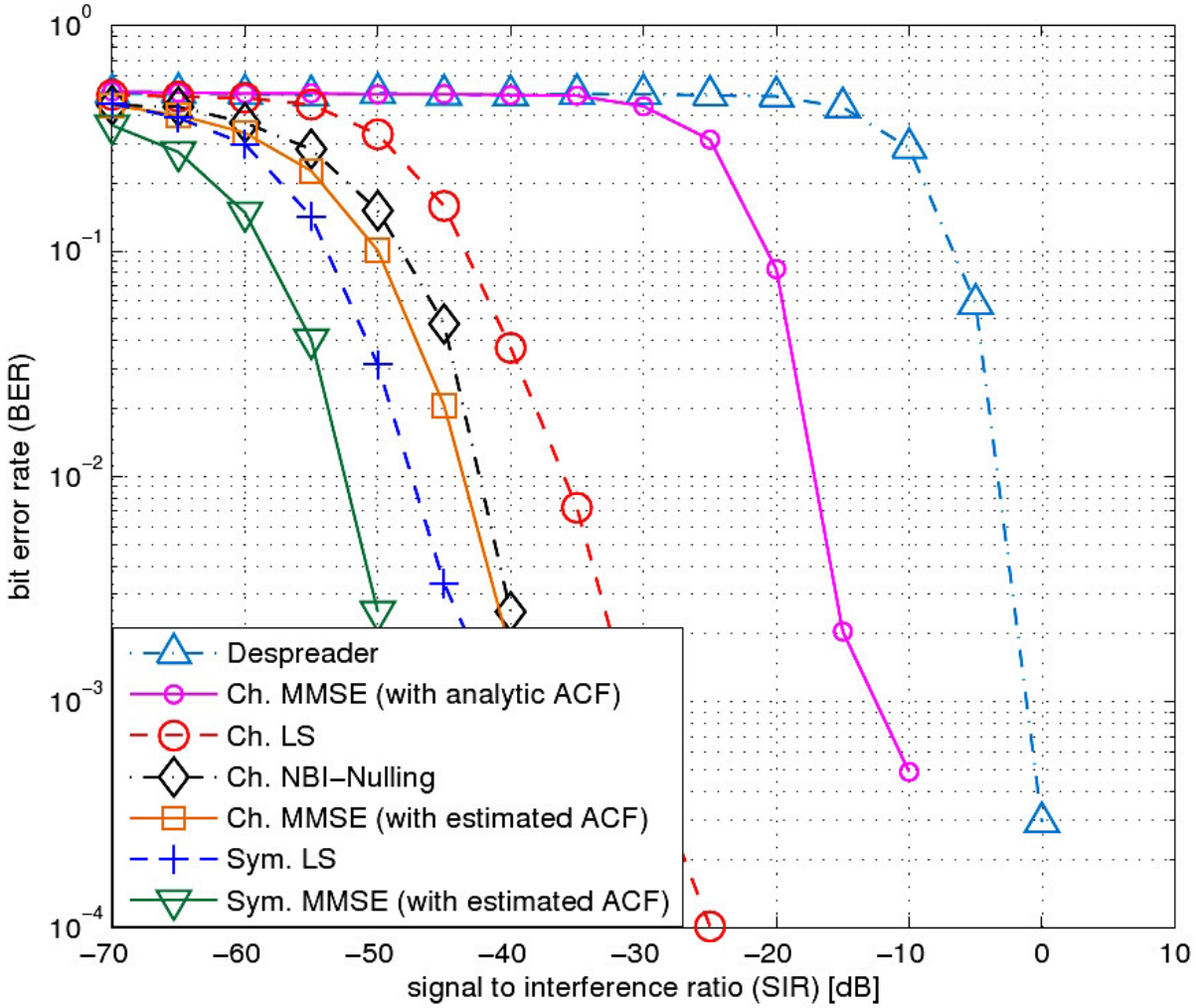

Mitigation – Parallel Multichannel AcR

Open Questions

- best results need a good estimate of the NBI's correlation
  - (very) long training sequences
  - a-priory knowledge

  $\Rightarrow$ both not practical
- results also indicate that linear combiners might not be optimal

Mitigation – Parallel Multichannel AcR

Open Questions

- best results need a good estimate of the NBI's correlation
  - (very) long training sequences
  - a-priory knowledge

  $\Rightarrow$ both not practical
- results also indicate that linear combiners might not be optimal

... anyone interested in a PhD position?

Introduction

Basics / Overview
- What is "Narrowband" Interference?
- Mitigation Strategies

Mitigation Strategies (Details)
- Direct Approaches (Filters, Feedback Loops)
- NBI-by-NBI Mitigation: Coding/Postprocessing
- NBI-by-* Mitigation: Parallel Multichannel AcR

Conclusion and References

Conclusion

Basics

- definition for "narrowband" interference
- SIR up to $-50\,\mathrm{dB}$ ($> 8\,\mathrm{bit} \rightarrow$ jamming of ADC)
- main starting points for NBI mitigation

Results

- three distinct approaches (coding, multichannel AcR, filtering)
- NBI mitigation comes at a cost
  - additional complexity ($\rightarrow$ low-power, low-complexity?)
  - performance degradation without NBI possible
- (near) complete removal of NBI is possible
- lots of papers; nonetheless "work in progress"

References I

K. Witrisal,
"A Tutorial on Noncoherent UWB Systems,"
Ch. 1 *in Proc. Design and Analysis of Noncoherent UWB Transceivers*, September 2008. (Habilitation Thesis, Graz University of Technology)

L. Feng and W. Namgoong,
"An oversampled channelized UWB receiver with transmitted reference modulation,"
IEEE Trans. Wireless Commun., vol. 5, no. 6, pp. 1497–1505, Jun. 2006.

M. Pausini and G. J. M. Janssen,
"On the narrowband interference in transmitted reference UWB receivers,"
in *IEEE Intern. Conf. on Ultra-Wideband, ICU*, Zürich, CH, Sep. 2005.

S. Lee, S. Bagga, and W. Serdijn,
"A quadrature downconversion autocorrelation receiver architecture for UWB,"
in *Intern. Works. UWB Syst. Joint with Conf. UWB Syst. and Techn., UWBST & IWUWBS*, May 2004, pp. 6–10.

F. Dowla, F. Nekoogar, and A. Spiridon,
"Interference mitigation in transmitted-reference ultra-wideband (UWB) receivers,"
in *IEEE Antennas and Propagation Society International Symposium, 2004*, vol. 2, Jun. 2004, pp. 1307–1310

C. Steiner and A. Wittneben,
"On the interference robustness of ultra-wideband energy detection receivers,"
in *IEEE Intern. Conf. on Ultra-Wideband, ICUWB*, Singapore, Sep. 2007, pp. 721–726.

References II

M. Pausini and G. J. M. Janssen,
"Narrowband interference suppression in transmitted reference UWB receivers using sub-band notch filters,"
in *Proc. European Signal Processing Conference, EUSIPCO*, Florence, Italy, Sep. 2006, invited paper.

Q. H. Dang and A.-J. van der Veen,
"Narrowband interference mitigation for a transmitted reference ultra-wideband receiver,"
in *Proc. European Signal Processing Conference, EUSIPCO*, Florence, Italy, Sep. 2006.

K. Witrisal and Y. D. Alemseged,
"Narrowband interference mitigation for differential UWB systems,"
in *Asilomar Conference on Signals, Systems, and Computers*, Pacific Grove, CA, Oct. 2005.

Y. D. Alemseged and K. Witrisal,
"Energy detection under narrowband interference in UWB systems,"
in *Intern. Conf. on Information, Communications and Signal Processing, ICICS*, Singapore, Dec. 2007.

Y. D. Alemseged and K. Witrisal,
"Modeling and mitigation of narrowband interference for transmitted-reference UWB systems,"
IEEE J. Select. Topics in Signal Proc., vol. 1, no. 3, Oct. 2007.

K. Witrisal,
"Noncoherent autocorrelation detection of orthogonal multicarrier UWB signals,"
in *IEEE Intern. Conf. on Ultra-Wideband, ICUWB*, Hannover, Germany, Sep. 2008, invited paper.

References III

L. Yang and G. Giannakis,
"Ultra-wideband communications: An idea whose time has come,"
IEEE Signal Processing Mag., vol. 21, no. 6, pp. 26–54, Nov. 2004.

M. Chiani and A. Giorgetti,
"Coexistence Between UWB and Narrow-Band Wireless Communication Systems,"
Proc. IEEE, vol. 97, no. 2, pp. 231–254

European Commission,
"Commission decision of 21 April 2009 amending Decision 2007/131/EC on allowing the use of the radio spectrum for equipment using ultra-wideband technology in a harmonised manner in the Community,"
Official J. Eur. Union, Apr. 25, 2009.

Federal Communications Commission (FCC),
"Revision of part 15 of the commission's rules regarding ultra-wideband transmission systems, first report and order,"
ET Docket 98-153, Feb. 14, 2002.

Wikipedia (2009),
"dBm" and "IEEE 802.11,"
[Online; accessed 21-May-2009]. Available: http://en.wikipedia.org/wiki/dBm and http://en.wikipedia.org/wiki/IEEE_802.11-2007