Multi-Band Orthogonal Frequency-Division-Multiplexing Ultra-Wideband

(MB–OFDM–UWB)

Stefan Mendel

Signal Processing Seminar

Graz University of Technology

Outline

- **Motivation**
  - **Marked-demands**
  - **Wireless standards**
  - **Ultra wideband regulation**
  - **Challenges**
- Introduction to OFDM
- Multi-band OFDM ultra-wideband
- Implementation issues
- Performance characterization
- Conclusion

Motivation – Market Demands

- **High data-rates**
- **Low power**
- **Low complexity**
- **Low cost**
- **CMOS compatible**
- **Flexibility**

Wireless Standard Overview

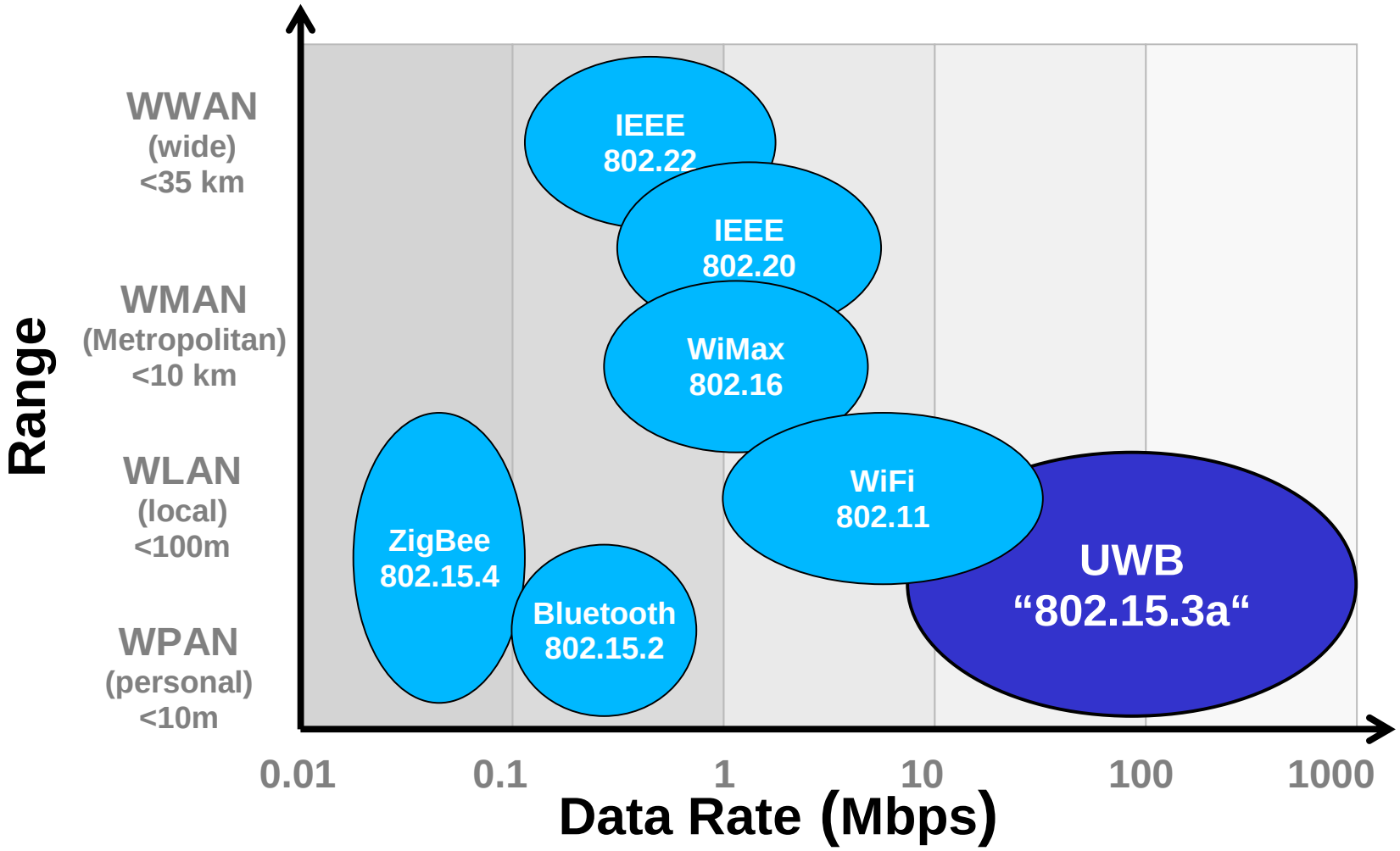

UWB Protocolls

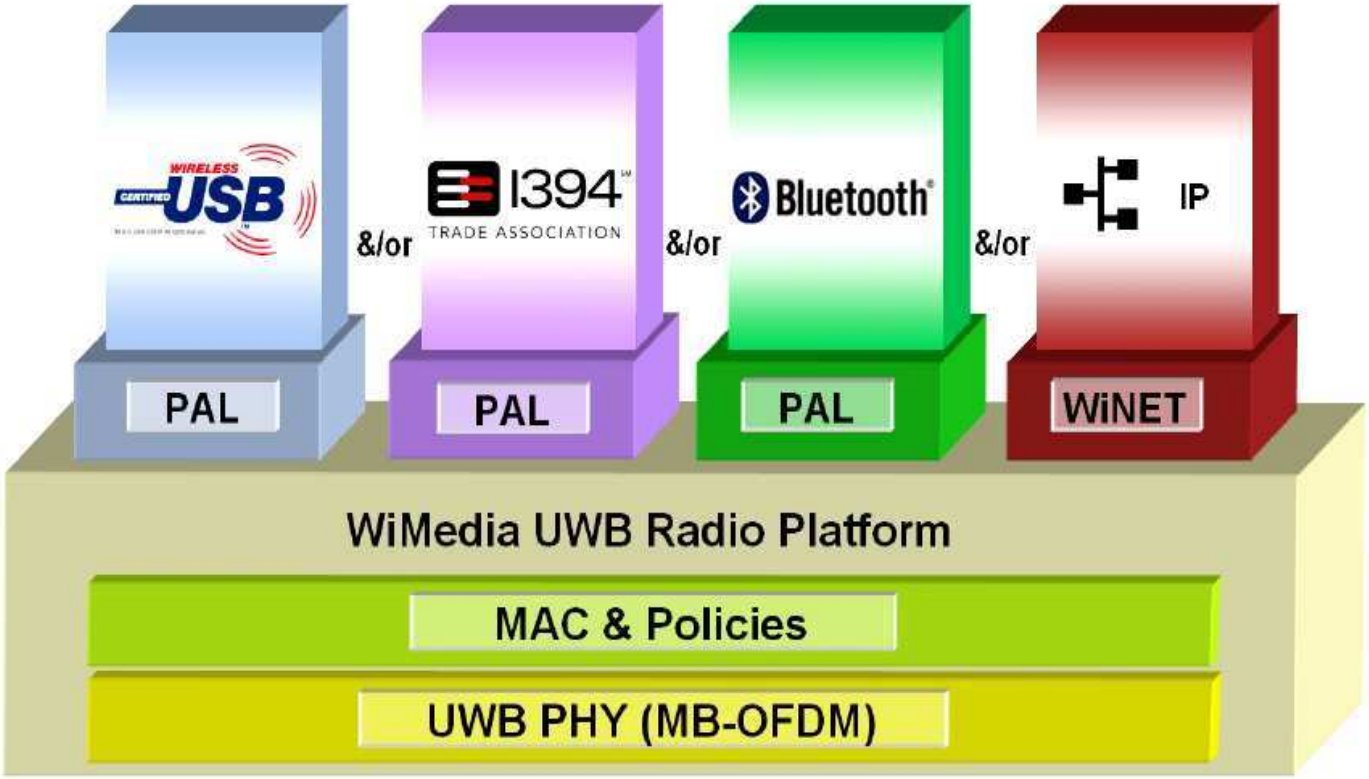

PAL: Protocol Adaptation Layer

Motivation – Ultra-Wideband

- Federal Communications Cummission (FCC) in U.S.
- 7.5 GHz free bandwidth
  - 3.1 GHz to 10.6 GHz
- Ultra wideband
  - -10 dB bandwidth > 500 MHz or
  - Relative bandwidth > 20% of carrier frequency
- Spectral mask
  - Power spectral density (PSD)
  - Below **- 41.25** dBm in 1 Hz bandwidth

} **below noise level**

Motivation – Challenges

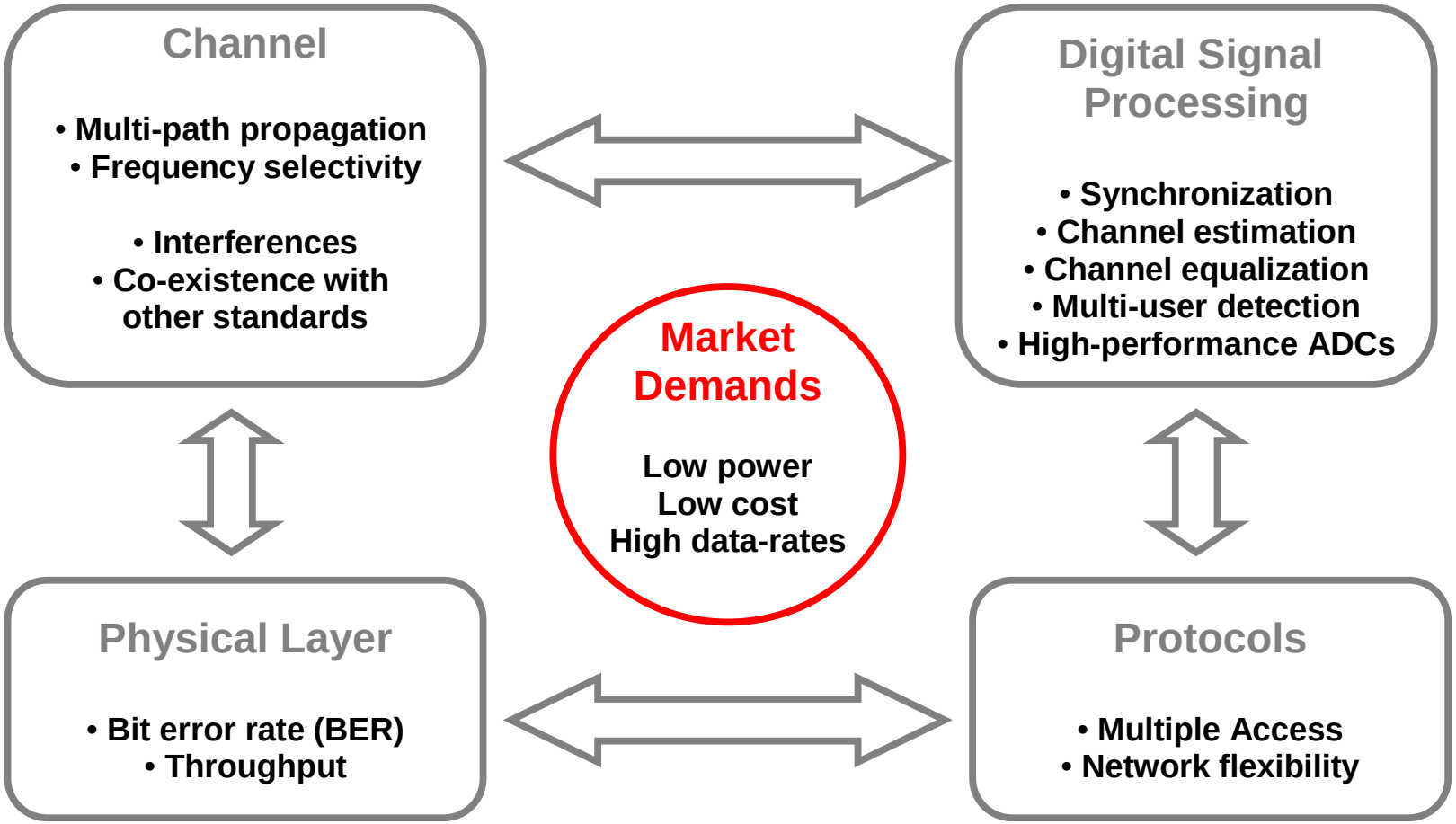

Outline

- Motivation
- **Introduction to OFDM**
  - **Multi-carrier**
  - **OFDM concept**
  - **Frequency diversity**
  - **Cyclic prefix**
  - **Implementation**
  - **Advantages**
- Multi-band OFDM ultra-wideband
- Implementation issues
- Performance characterization
- Conclusion

OFDM – Multi-carrier

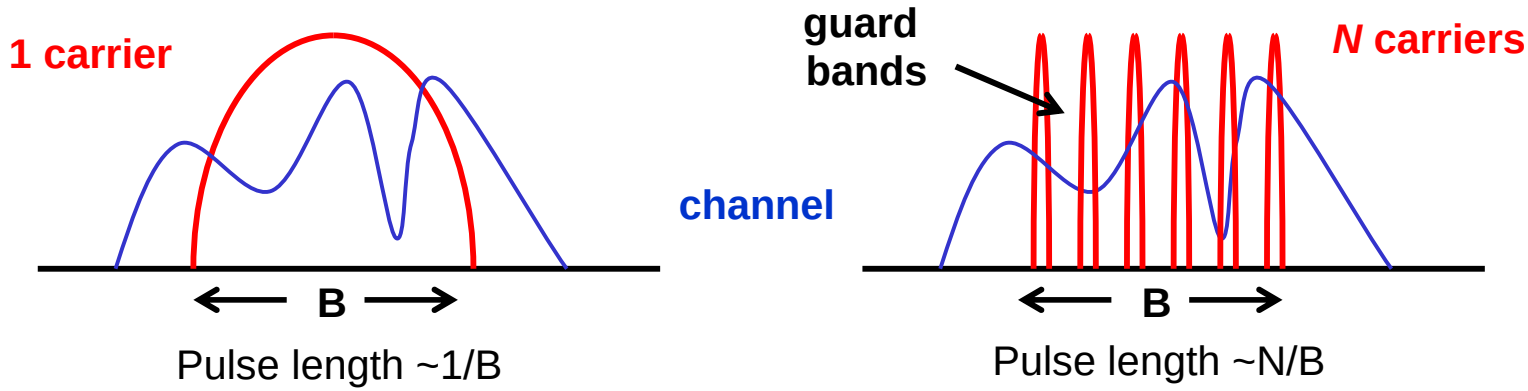

- Frequency selective fading
- Short pulses
- ISI rather long
- Long equalizer
- Poor spectral efficiency

- Flat fading for each carrier
- *N* times longer pulses
- ISI rather short
- *N* short equalizers (multiplier)
- Poor spectral efficiency

Improve spectral efficiency using orthogonal carriers
(allows overlapping)

OFDM – Orthogonal Carriers

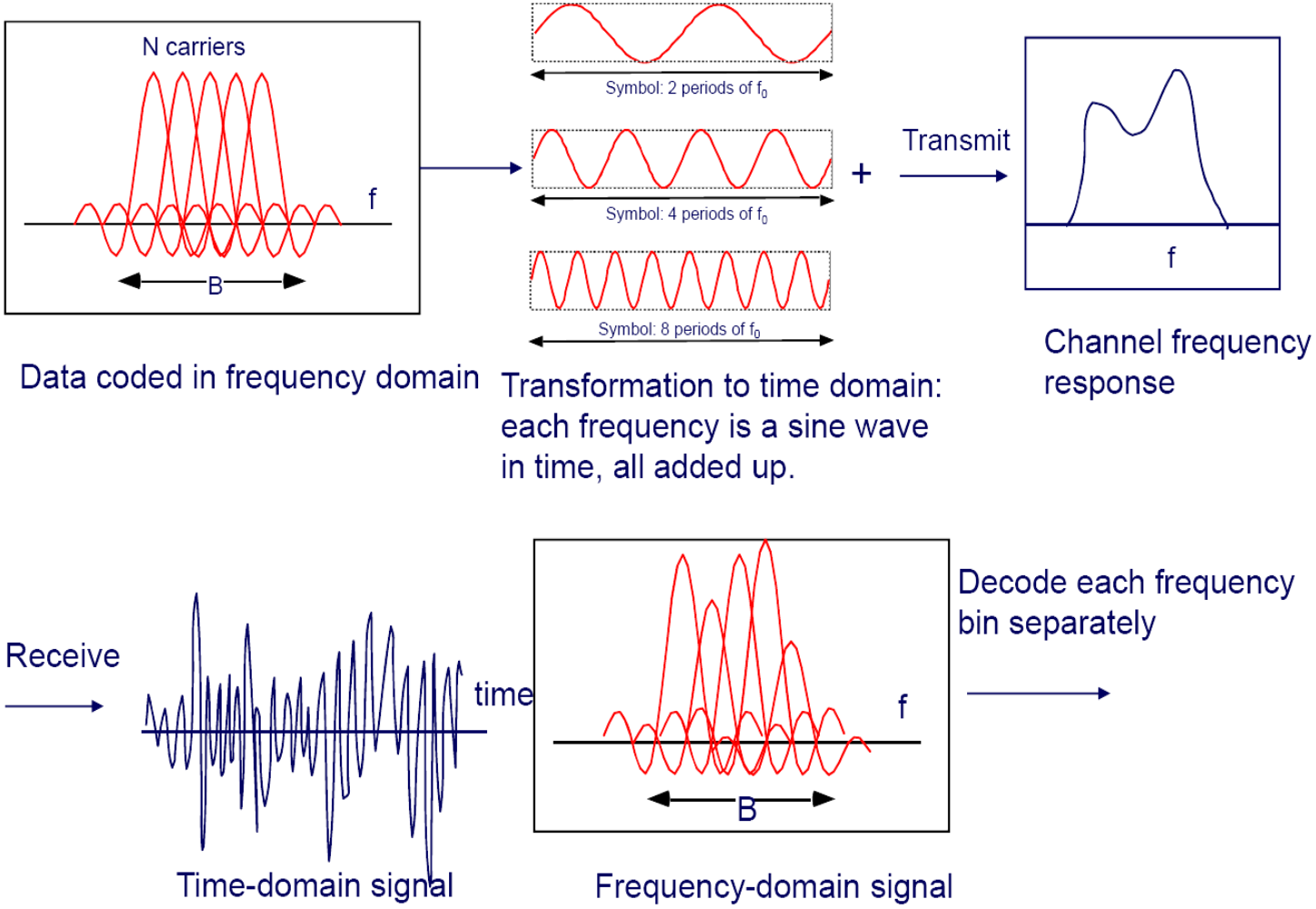

OFDM – Frequency Diversity

- Orthogonal carriers
  - Carrier pulses overlap
  - Spectral efficient
  - No inter-carrier-interference (ICI)
- Easy implementation using IFFTs
- Very sensitive to frequency synchronization
- Different modulation schemes
  - QAM
  - QPSK
- Frequency selective fading
  - Source coding
  - Forward error correction (FOC)

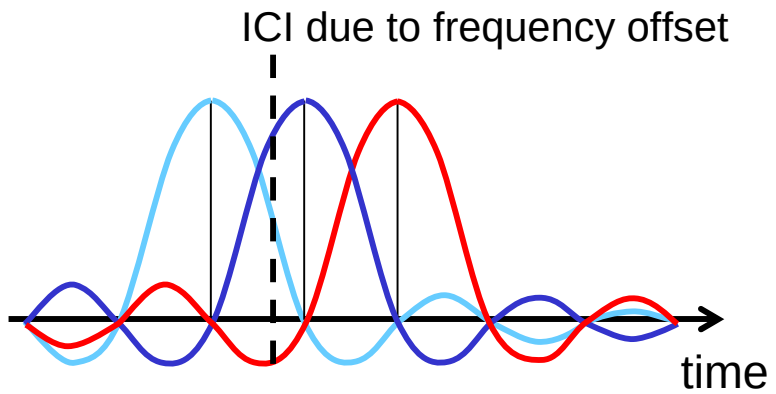

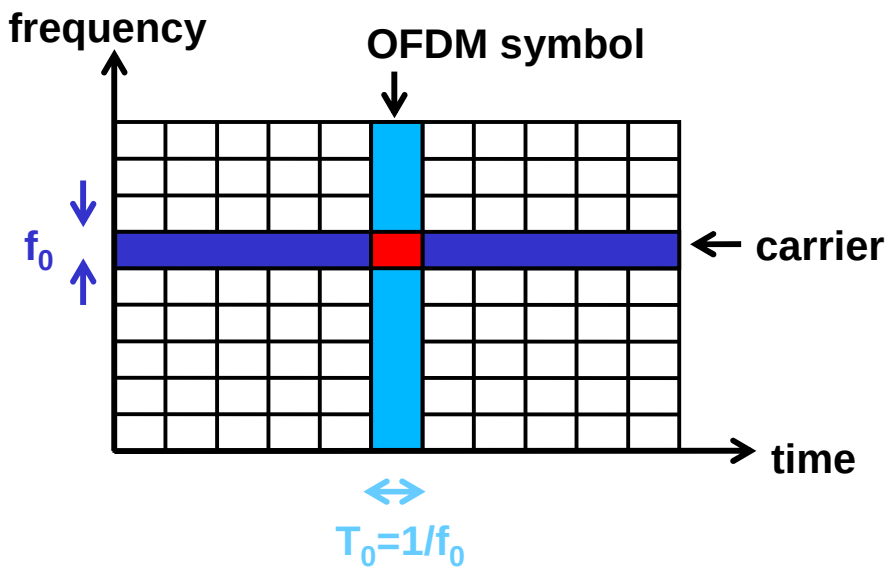

OFDM – Cyclic Prefix

- Cyclic prefix
  - Longer than channel delay spread
  - Almost completely eliminates ISI

- Cyclic convolution ↔ DFT multiplication
  (time domain) (frequency domain)

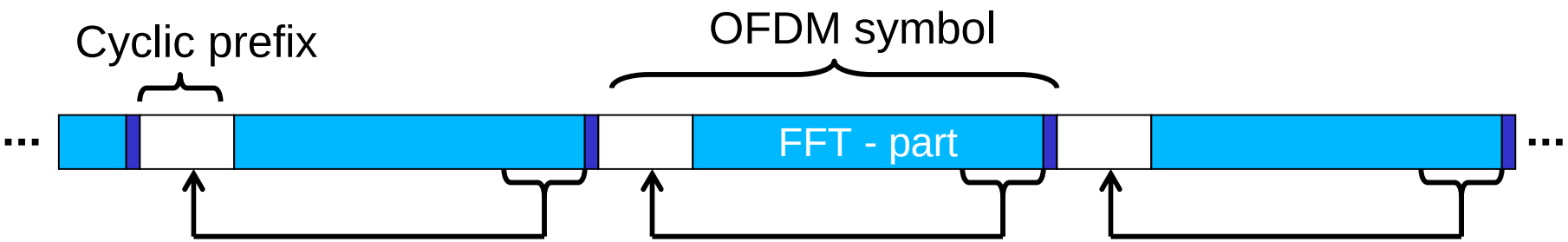

OFDM – Implementation

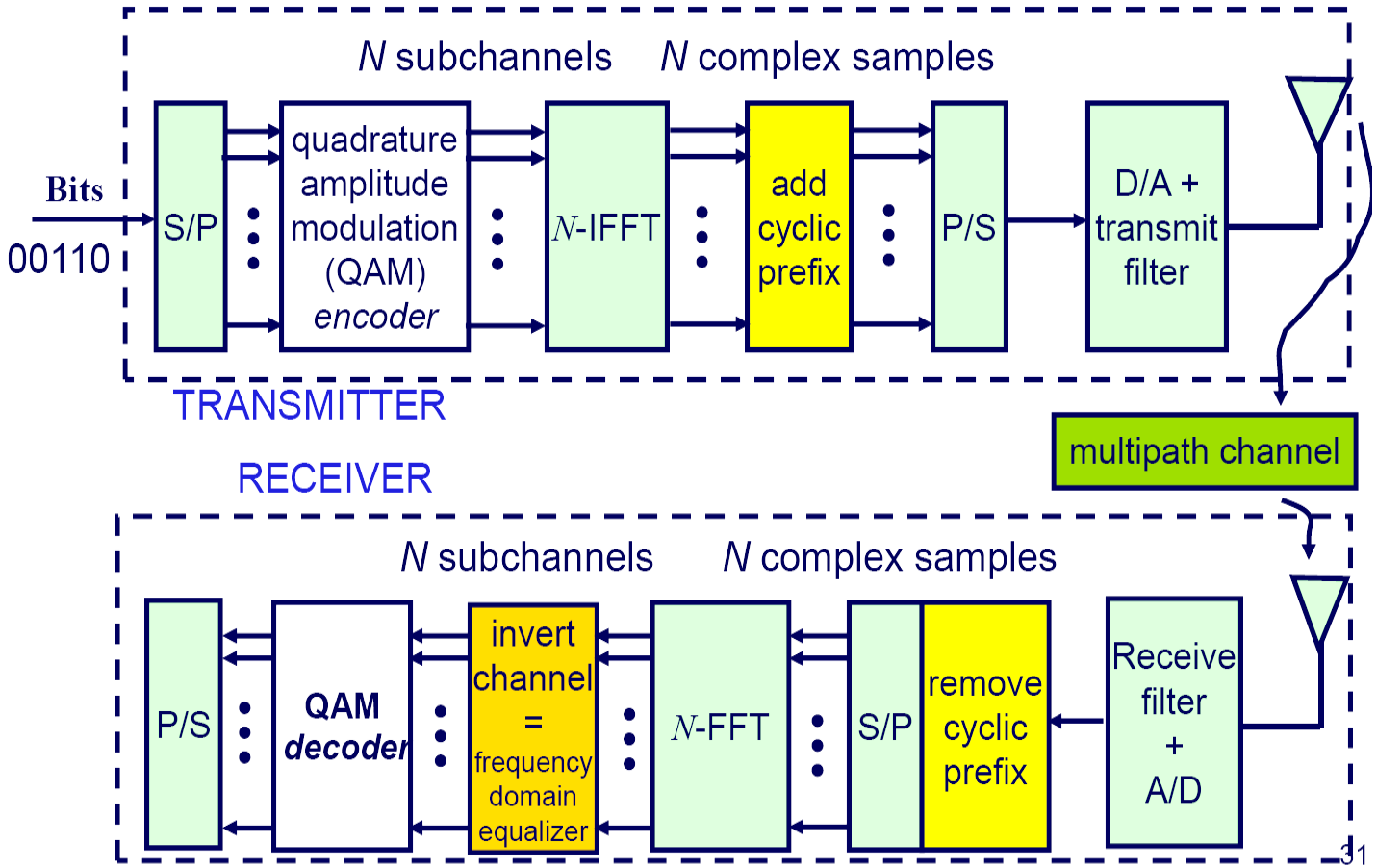

OFDM – Advantages

- Bandwidth efficiency
  - Overlapping spectrum of orthogonal carriers
- Frequency selective fading
  - Source coding
  - Equalizer
- Inter-symbol-interference (ISI) and inter-carrier-interference (ICI)
  - Orthogonal sub-carriers
  - Cyclic prefix and guard interval
- High data-rate
  - Through a number of parallel low-rate streams
- Implementation
  - Low-cost, low-power, and low-complexity

UWB Candidate

Outline

- Motivation
- Introduction to OFDM
- **Multi-band OFDM ultra-wideband**
  - **IEEE 802.15.3a “failed“ standard**
  - **UWB – OFDM extensions**
  - **Frequency groups and bands**
  - **Time-frequency codes**
  - **Diversity improvements**
  - **Data rates overview**
- Implementation issues
- Performance characterization
- Conclusion

IEEE 802.15.3a “failed“ standard

- Multi-band OFDM
  - Multi-band OFDM Alliance (MBOA)
  - Intel, Texas Instruments, Nokia, Samsung, Phillips, Panasonic,...
  - More than 90 member companies
- Direct Sequence
  - Freescale (former Motorola)
  - Demo: 1.3 Gb/sec over 2m

FAILED

⇨ WiMedia Alliance

OFDM Extension for UWB

- QPSK modulation
  - Reduces ADC and DAC resolution
  - Reduces precision of digital logic, e.g., FFT and IFFT
  - Reduces power consumption
- Large sub-carrier spacing
  - Low phase noise requirements
  - More robust synchronization
- Zero-padding + Overlap Add
  - Instead of Cyclic prefix
  - Maximize transmit power

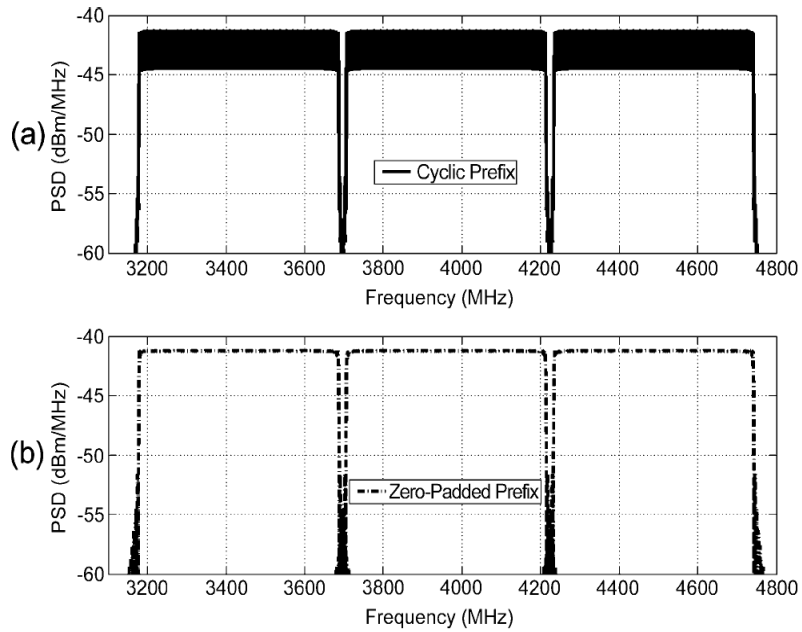

UWB Bands and Groups

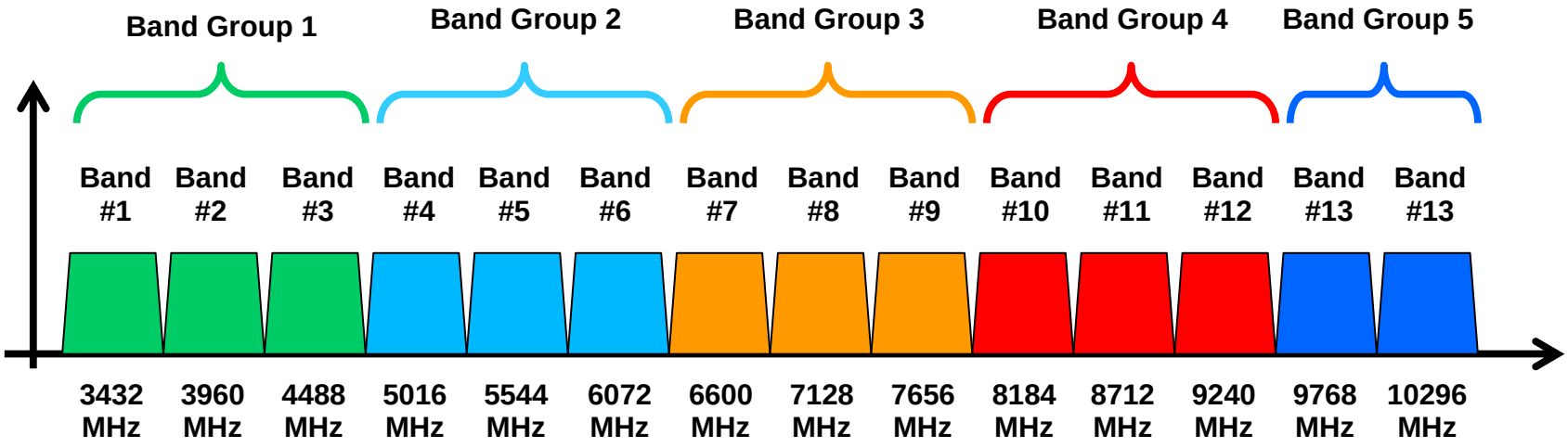

- Channel carrier frequency: $f_c(x) = 2904 + 528 \cdot x$ [MHz]

- OFDM symbol:

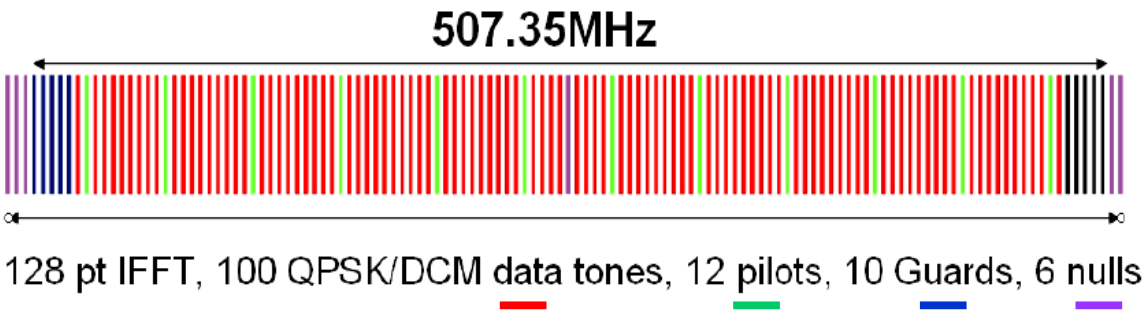

Time Frequency Codes (TFC)

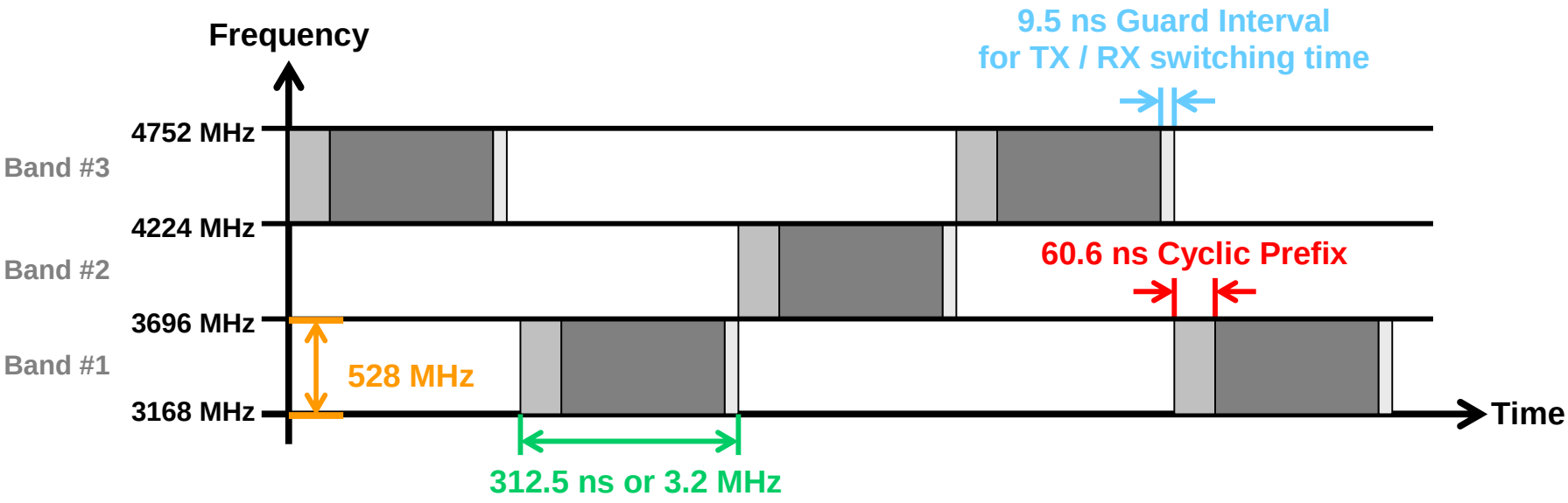

- Time frequency interleaving (TFI)
  - Fast frequency hopping
  - Channel diversity, multi-user access
- Fixed frequency interleaving (FFI)
  - Fixed band for higher data rates
- Guard interval
  - TX & RX switching time
  - Lock-in time for filters and frequency synthesizer

Diversity Improvements

- Time frequency codes (TFC) + 4.7 dB
  - Each band with 3 times more power
  - Time frequency interleaving or frequency hopping
- Convolution codes
  - Code rate R=1/3
    - 1 data bit, 2 bits redundancy
  - Puncturing
- Frequency domain spreading (FDS) + 3 dB
  - Force IFFT imput to be conjugate symmetric
  - IFFT always real -> reduces transmitter complexity
- Time domain spreading (TDS) + 3 dB
  - OFDM symbol + permutation of OFDM symbol

too costly for high data rates

Dual Carrier Modulation (DCM)

- Modulating data symbols in pairs
  - Two different **16-QAM** modulation constellations
  - Carriers seperated by at least **200 MHz**

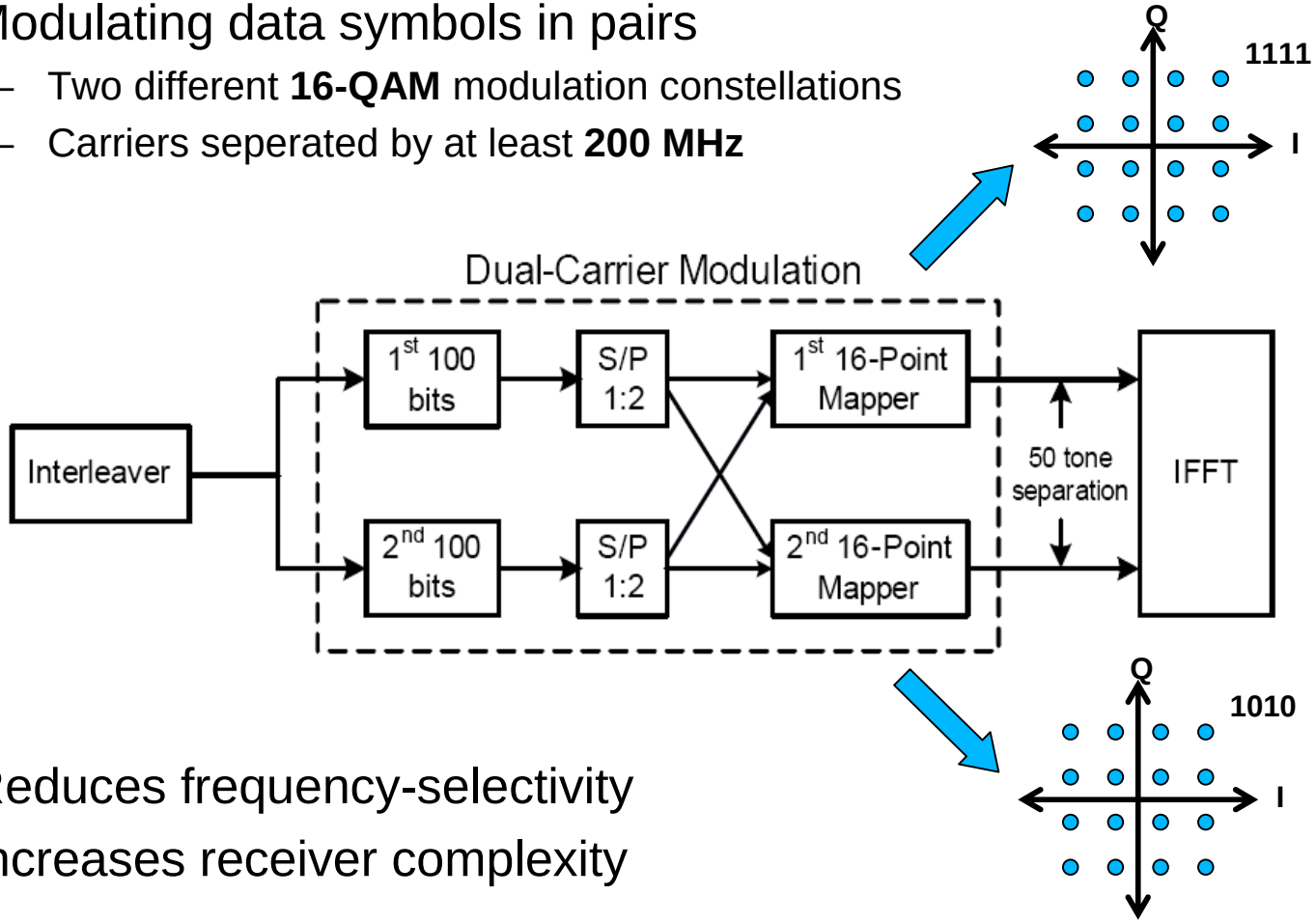

- Reduces frequency-selectivity
- Increases receiver complexity

Data Rates Overview

Info Data Rate Mbps	Modulation Scheme	Coding Rate R	2xFDS	2xTDS	Coded Bits / 6 OFDM Symbol	Info Bits / 6 OFDM Symbols
53.3	QPSK	1/3	YES	YES	300	100
80	QPSK	1/2	YES	YES	300	150
106.7	QPSK	1/3	NO	YES	600	200
110	QPSK	11/32	NO	YES	600	206.25
160	QPSK	1/2	NO	YES	600	300
200	QPSK	5/8	NO	YES	600	375
320	DCM	1/2	NO	NO	1200	600
400	DCM	5/8	NO	NO	1200	750
480	DCM	3/4	NO	NO	1200	900

Outline

- Motivation
- Introduction to OFDM
- Multi-band OFDM ultra-wideband
- **Implementation issues**
  - **Example transmitter (TX) architecture**
  - **Example receiver (RX) architecture**
  - **Frequency synthesis**
- Performance characterization
- Conclusion

Example Transmitter (TX)

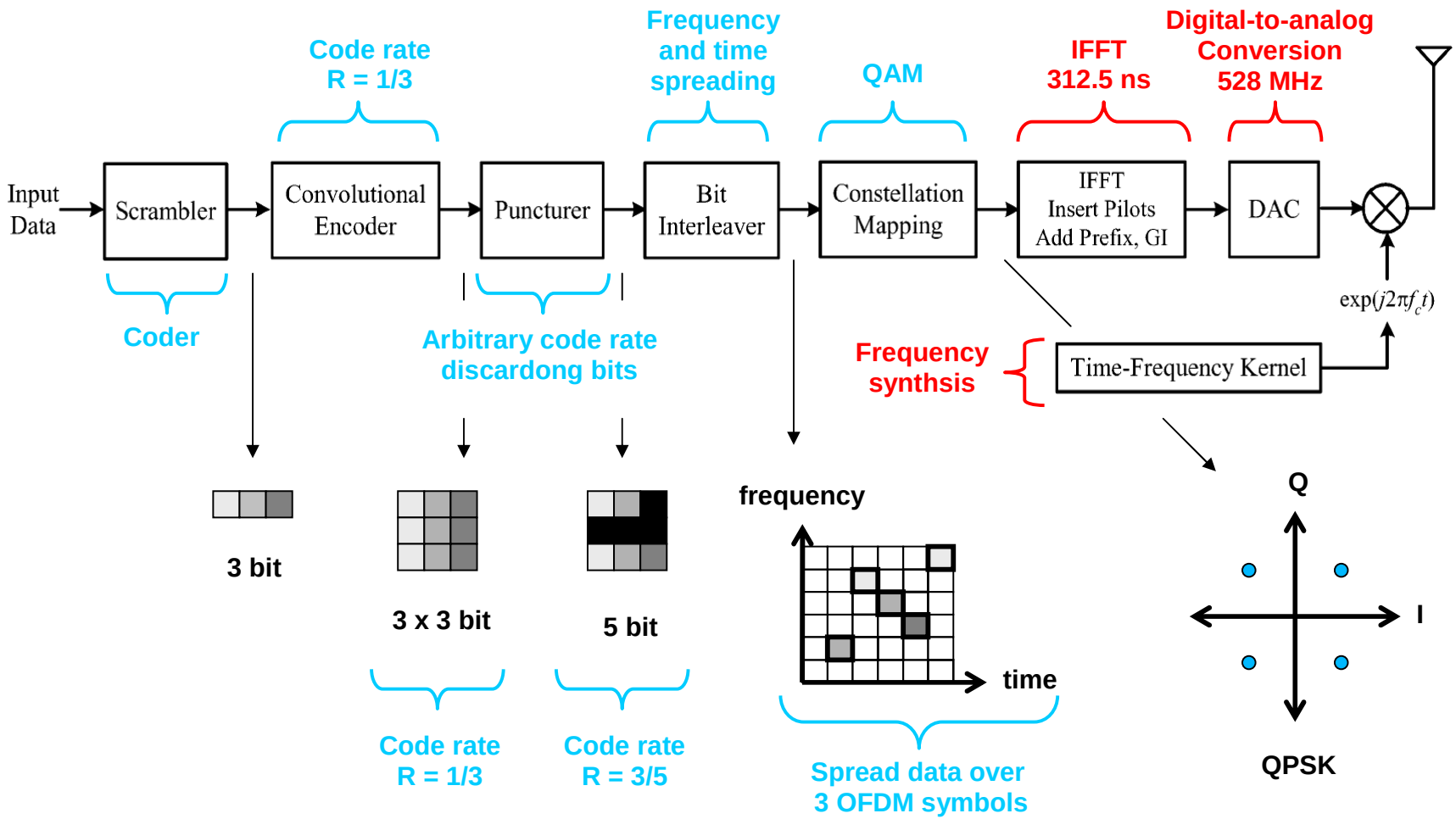

Example Receiver (RX)

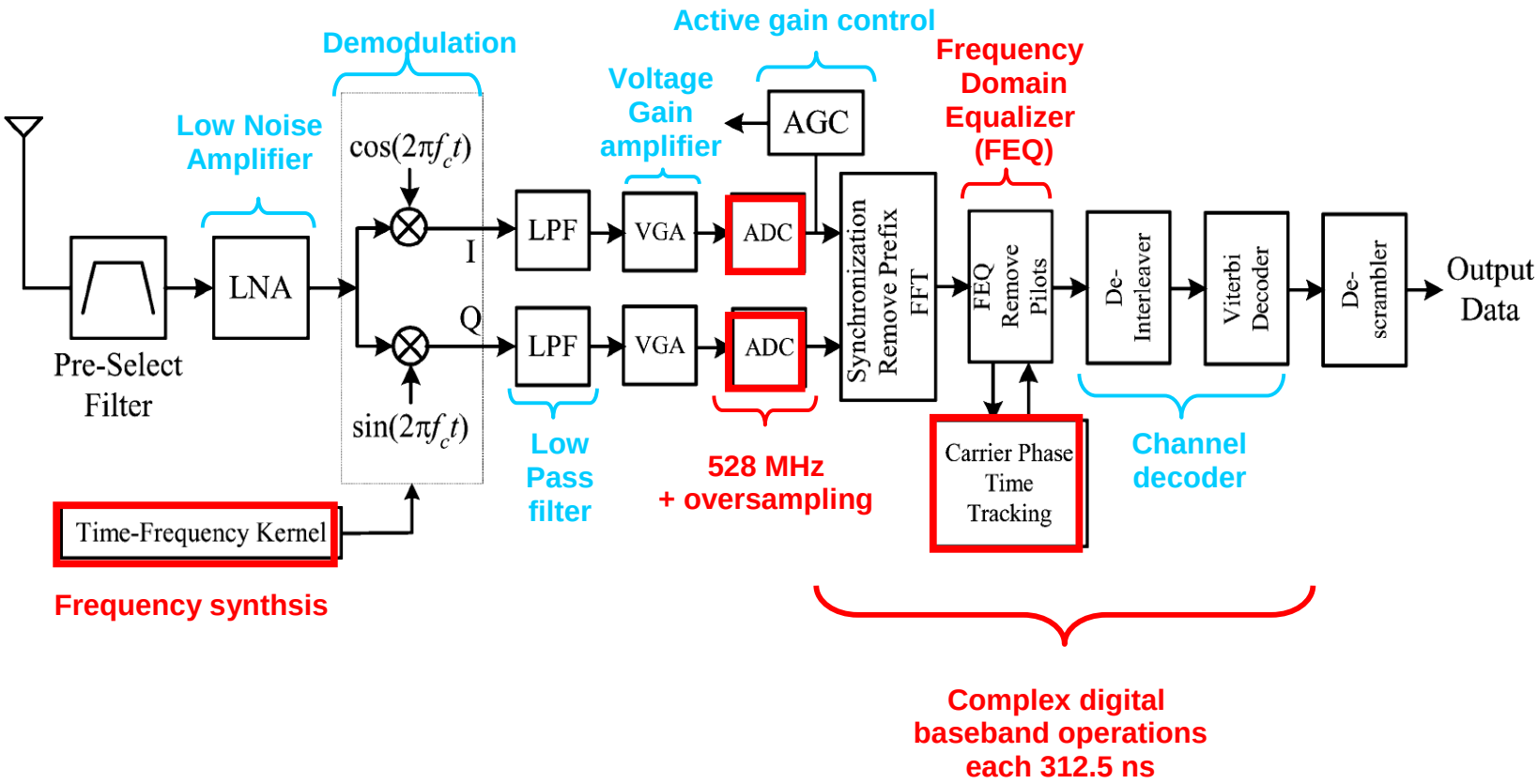

Frequency Synthesizer

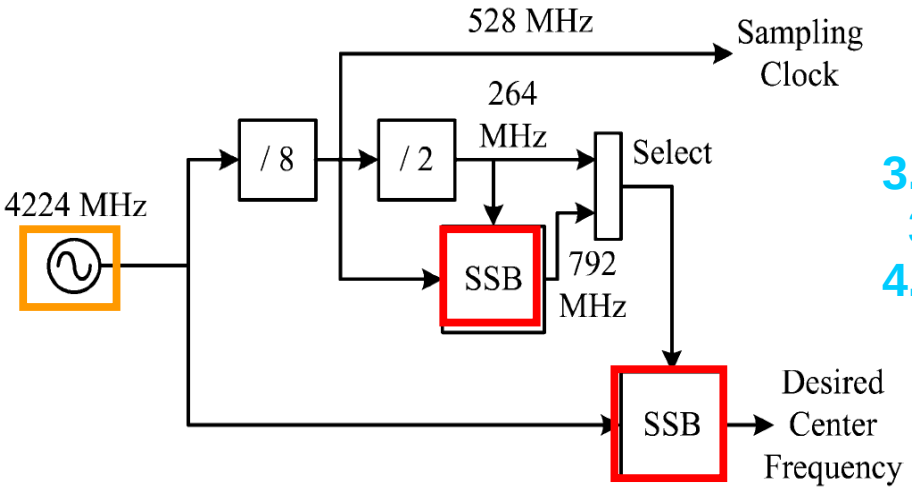

3.432 GHz
3.96 GHz
4.488 GHz

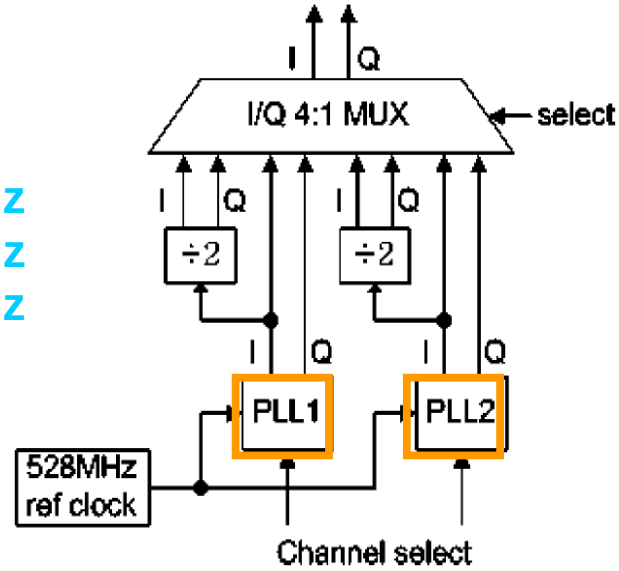

- Single phase-locked loop (PLLs)
- Single side-band (SSB) mixers

- More PLLs
- No SSB mixer

Spurious Tones, phase-noise, and switching time (9.5 ns)

Outline

- Motivation
- Introduction to OFDM
- Multi-band OFDM ultra-wideband
- Implementation issues
- **Performance characterization**
  - **Channel model**
  - **PER vs. Range**
  - **Comparison with DS-UWB**
- Conclusion

Channel Model

- Modified Saleh-Valenzuela (S-V) model
  - Small scale: Cluster arrival rates and ray arrival rates
  - Large scale: log-scale fading

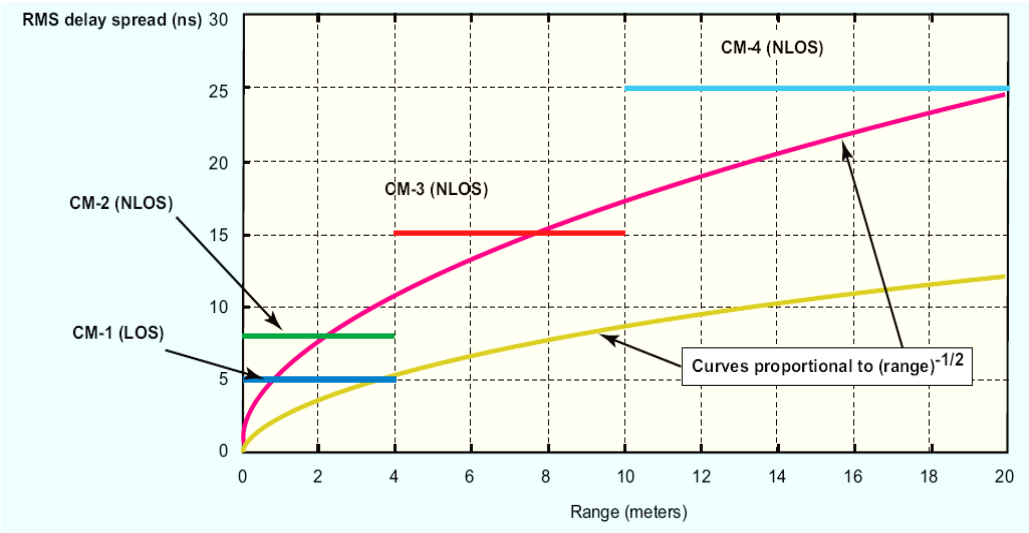

- Scenarios
  - CM1: line of sight (LOS) path ; range 0 m
  - CM2: non line of sight (NLOS) path ; range 0-4 m
  - CM3: non line of sight (NLOS) path ; range 4-10 m
  - CM4: extreme NLOS example with 25 ns rms delay spread

Packet Error Rate (PER) vs. Range

CM1:

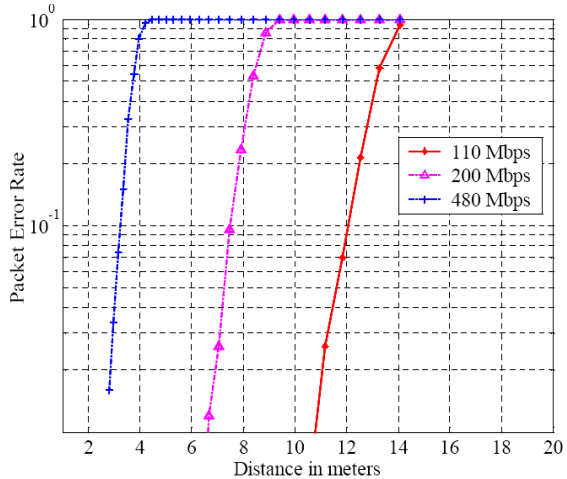

CM2:

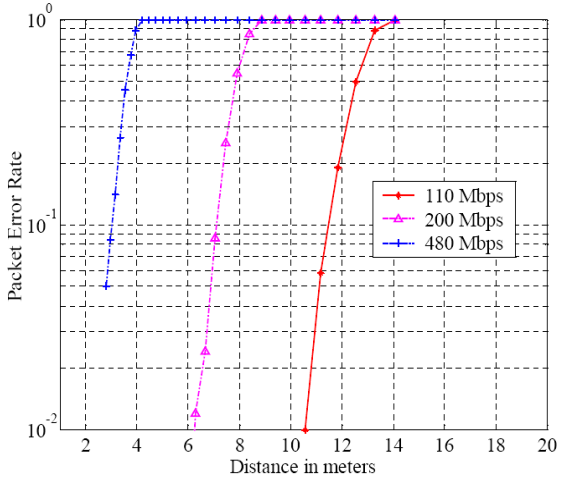

CM3:

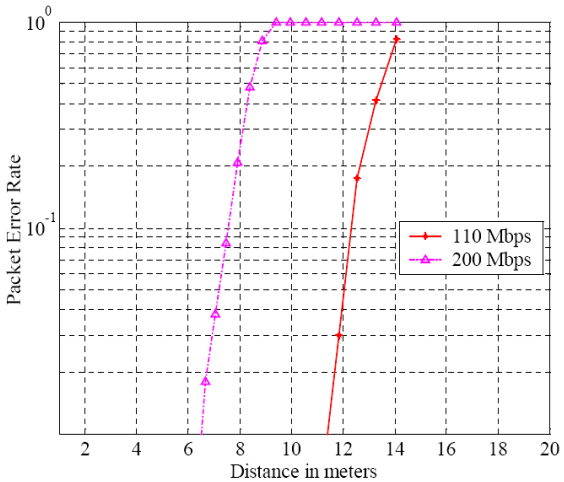

CM4:

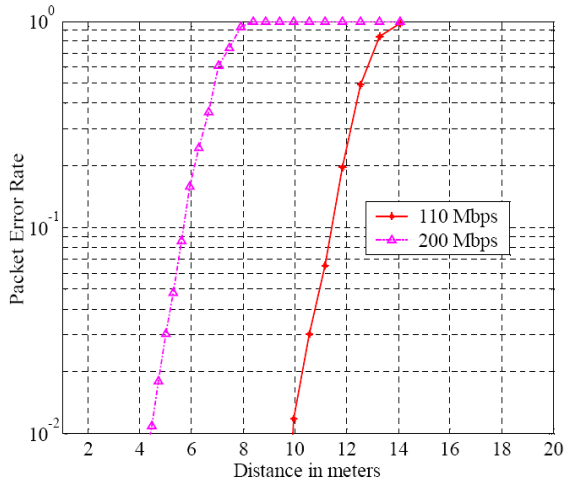

Comparison

	OFDM	Direct sequence
concept	orthogonal carriers	impulse radio, Rake receiver
multiple access	frequency hopping	CDMA
symbol duration	**long**	short
ISI & timing jitter	**less critical**	critical
acquisition	**Fast**	slow
equalizer	**several, short**	long
flexibility (standard)	**high**	little
Interferences	**avoid**	notch filters
flexibility (application)	Worse	**good**
Design	scaled OFDM	**true UWB**
modulation	QPSK / DCM	**BPSK**
error correction	extensive	**modest**
power consumption	complex digital part	**scales with application**
	always full rate	**dynamic sampling rate**
		reduce Rake fingers

MBAO claims...

Freescale claims...

Conclusion

- Advantages of MB-OFDM-UWB
  - Flexibility in using the FCC spectrum
  - Avoiding narrow band interference
  - Several channel diversity improvements
  - Relaxation for ADC implementation
  - A fully digital solution for signal processing
  - Low sensitivity to inter-symbol interference

- Drawbacks
  - High complexity in transceiver
  - Carrier frequency offset
  - High sampling rate
  - High power consumption
  - Synchronization

References

- Channel model:
  - Saleh and R. Valenzuela, "**A statistical model for indoor multipath propagation**," *IEEE J. Select. Areas Commun.*, vol. SAC-5, pp. 128–137, Feb. 1987.

- OFDM:
  - J. A. C. Bingham, "**Multicarrier modulation for data transmission: An idea whose time has come**," *IEEE Commun. Mag.*, vol. 28, pp. 5–14, May 1990.

References

- MB-OFDM-UWB standard proposal

  - A. Batra *et al.*, “**TI physical layer proposal for IEEE 802.15 task group 3a**,”, IEEE P802.15-03/142r2-TG3a, Mar. 2003.
  - A. Batra *et al.*,“**Multi-band OFDM physical layer proposal**,”, IEEE P802.15-03/268r0-TG3a, July 2003.
  - Ketan Mandke, Haewoon Nam, Lasya Yerramneni, and Christian Zuniga, “**The Evolution of UWB and IEEE 802.15.3a for Very High Data Rate WPAN**”, Report of EE 381K-11 Wireless Communications UWB Group, The University of Texas at Austin, May 2003
  - Somayazulu, Foerster, and Roy, “**Design Challenges for Very High Data Rate UWB Systems**,” Intel Labs, http://www.intel.com/technology/ultrawideband/downloads/Asilomar_2002_final.pdf. Last accessed May 5, 2003.
  - M. P. Wylie-Gree, P. A. Ranta, and J. Salokannel, “**Multi-band OFDM UWB Soluation for IEEE 802.15.3a WPANs**,“ Proceedings of the IEEE Advances in Wired and Wireless Communication Symposium, 18-19 April 2005.
  - D. Lowe and X. Huang, “Analysis and Evaluation of MB-OFDM Dual Carrier Modulation,“

References

- Zero padding vs. Cyclic prefix

  B. Muquet, Z.Wang, G. B. Giannakis, M. de Courville, and P. Duhamel, "**Cyclic prefix or zero padding for wireless multicarrier transmission**," *IEEE Trans. Commun.*, vol. 50, pp. 2136–2148, Dec. 2002.

- Dual carrier modulation (DCM)

  A. Batra, J. Balakrishnan, G.R. Aiello, J. R. Foerster, and A. Dabak, "**Improvements to the Multi-Band OFDM Phsical Layer**," in *Proceedings of the 3rd IEEE Consumer Communications and Networking Conference*, vol. 2, Jan. 2006, pp. 701-705.