Signal Processing and Speech Communication Lab.
Graz University of Technology

AS

Adaptive Systems—Homework Assignment 1

Name(s) Matr.No(s).

The analytical part of your homework (your calculation sheets) **as well as** the MATLAB simulation protocol have to be delivered as **hard copy** to our mailbox at Inffeldgasse 16c, ground floor, no later than **2016/12/2**. Use a printed version of **this entire document** as the title pages and fill in your **name(s) and matriculation number(s)**. Submitting your homework as a LaTeX document can earn you **up to 2 points!**
Your MATLAB programs (`*.m` files) and the simulation protocol (in pdf format!) have to be submitted via **e-mail** to the address `hw2.spsc@tugraz.at` no later than **2016/12/2**. The subject of the e-mail consists of the assignment number and your matriculation number(s) **"Assignment1, MatrNo1, MatrNo2"**. You have to zip (or tar) all your homework files to one single file with the name `Assignment1_MatrNo1_MatrNo2.zip`, e.g., `Assignment1_9833280_9933281.zip`, which has to be attached to the e-mail.

A justification of all your answers is mandatory to achieve all points!

Analytical Problem 1.1 (10 Points)—Theoretical Foundations

1) Matrix Theory

Most of the time we have to deal with linear algebra and matrix theory, which is one of the most important branches in mathematics. We can gain an enormous benefit in deriving solutions if we understand the principles of linear algebra.

The following statements must be answered with true or false including an appropriate proof (sometimes, a counterexample is sufficient).

(i) Every Toeplitz matrix is positive-definite.

(ii) Every Toeplitz matrix is a square matrix.

(iii) A matrix $\mathbf{W}$ is called positive-semidefinite if at least one eigenvalue λ_i of $\mathbf{W}$ is zero.

(iv) The inverse of every Toeplitz matrix is also Toeplitz.

(v) Consider an arbitrary vector $\mathbf{w}$ which we want to transform by using transformation matrices. Write down the matrices for

- stretching
- rotation by an angle φ

and include a simple example. Sketch the resulting vectors.

2) Principles of Optimization

In adaptive systems and many other fields we are often encountered with maximization (or minimization) of an objective function which is derived from an error-criterion. This problems are well known as *optimization problems* and the fundamentals are mandatory for understanding the derivation of solutions in adaptive system theory.

Consider an optimization problem of an objective function $f(\mathbf{x})$, i.e. we want to find the minimum of the objective function

$$\mathbf{x_o} = \min_{\mathbf{x}} f(\mathbf{x})$$

(i) What are the two optimality conditions which must be satisfied for a minimizer $\mathbf{x_0}$?

(ii) Under the assumption, that $\mathbf{x_0}$ is a minimizer, apply a second-order Taylor-series expansion of $f(\mathbf{x})$ in a sufficiently small neighborhood around $\mathbf{x_o}$ and explain the two optimality conditions.

(iii) Exemplify the optimization problem by an least-squares approach of an adaptive filter with filter weights $\mathbf{c}$. Therefore you can assume that you have a finite data-record of the input sequence of length L and a FIR structure with N filter weights. You should show that the two conditions hold for the least-squares approach.

3) *Wiener Filters*

The Wiener Filter is one of the linear optimum discrete-time filters which is used in a variety of applications. The first proposal was made by Norbert Wiener in the 1940s and was the first statistically designed filter at that time. We will use the Wiener filter and its according solution very often.

(a) An alternative approach to derive the Wiener filter is the so-called *orthogonality principle.*

(i) Derive the orthogonality principle

(ii) From the result of (i), formulate the Wiener-Hopf solution.

(b) One way to solve the Wiener solution is to invert the autocorrelation matrix of the input process which is known as direct solution.

(i) What are the two major problems with this approach?

(ii) Consider a simple iterative method which approximates the direct solution

$$\mathbf{c}(n+1) = \mathbf{c}(n)(\mathbf{I} - \mu\mathbf{R}) + \mu\mathbf{p}$$

Show that this approach leads to the optimal solution. How does the stepsize μ influence the result?

(c) Consider the system identification problem as depicted in the figure below. The model order of the system $H(z)$ is unknown and therefore we have to distinguish between three cases, namely *underfitted*, *critically fitted* and *overfitted* modelling. Let us define the order of $H(z)$ by N. Furthermore we define the model-order of the adaptive filter with M. Explain in words how well the identification would work in all three cases mentioned above. Also explain how the minimum mean-squared error J_{min} would evolve with increasing order M of the adaptive filter. (sketch the function $J_{min}(M)$)

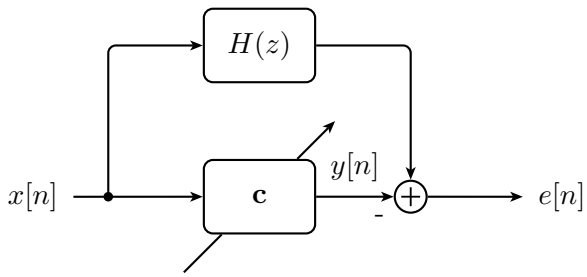

Analytical Problem 1.2 (10 Points)—Adaptive Linear Combiner

In this task we want to exemplify the so-called *adaptive linear combiner*. Therefore, we consider a receiver structure as depicted in the figure below.

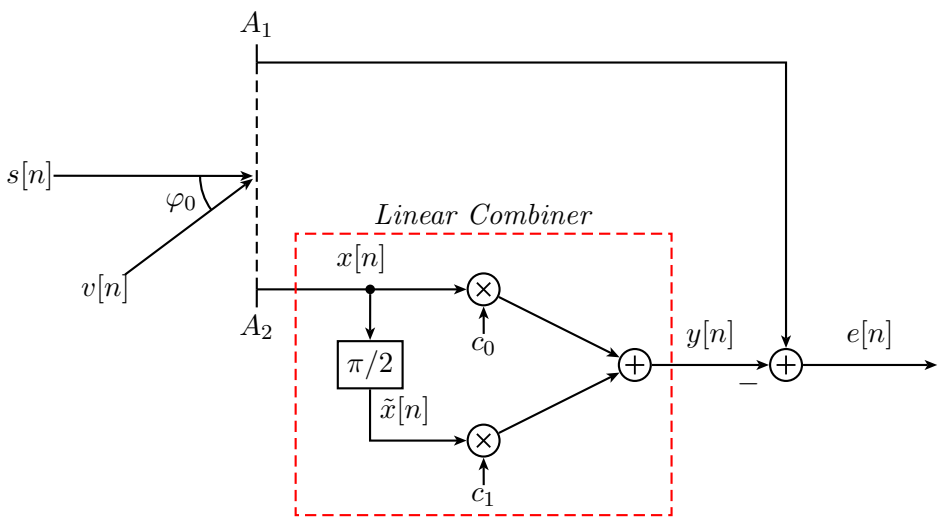

The receiver consists of two omni-directional antennas A_1 and A_2 which are separated by the distance l and the linear combiner depicted by the dashed frame. A desired signal $s[n]$ arrives perpendicular to the line connection of A_1 and A_2 and a so-called jammer $v[n]$ arrives at a certain angle φ_0 with respect to the direction of $s[n]$. We can assume that both incoming signals are narrow-band concentrated around a frequency ω_0, which allows us to model them as single tones of the form

$$s[n] = \alpha[n]\cos(n\omega_0 + \varphi_1)$$

$$v[n] = \beta[n]\cos(n\omega_0 + \varphi_2)$$

where φ_1 and φ_2 are random initial phases of the carrier and assumed to be uniformly distributed, i.e. $\varphi \sim \mathcal{U}(-\pi, \pi]$. We also assume that the amplitudes are narrowband, uncorrelated and zero-mean distributed. As we can observe from the figure, the signal $s[n]$ arrives at both antennas at the same time, but the jammer arrives at A_1 with a certain amount of delay. As a reference signal for the linear combiner we are using the superimposed signal received at antenna A_1. The adaptive filter adjusts the weight c_0 and c_1 in the sense of a mean-squared error criterion.

(a) Calculate the time-delay between the first and second antenna of the jammer. Define the propagation speed by v_c.

(b) Formulate the objective function $J(c_0, c_1)$ and solve the optimization problem, i.e. calculate the two filter weights using the Wiener Hopf solution.
Hint: Remember that $\mathbb{E}(f(\varphi)) = \int_{-\pi}^{\pi} f(\varphi)p(\varphi)d\varphi$ where $p(\varphi)$ is the probability density function of φ.

(c) Calculate the optimized output with the result from above. Now we want to investigate the SNR at the output of the receiver. Formulate the SNR at the reference input and at the output. What is special about it and why?

MATLAB Problem 1.3 (13 Points)—Least-Squares Tracking of a Time-Varying System

Consider a system identification problem for a time-varying impulse response. In other words, focus on the linear filtering problem and a desired signal

$$d[n] = \mathbf{h}^T[n]\mathbf{x}[n] + \nu[n]$$

where $\mathbf{h}[n]$ indicates that the impulse response now depends on the actual time n.

(a) Draw the block diagram of the problem and label the diagram.

(b) Write a MATLAB function that computes the optimum filter coefficients in the sense of *least squares* according to the following specifications:

```
function c = ls_filter( x, d, N)
% x ... input signal
% d ... desired output signal (of same length as x)
% N ... number of filter coefficients
```

(c) For the 'unknown' system, implement a filter with the following time-varying 3-sample impulse response:

$$\mathbf{h}[n] = \begin{bmatrix} 1 \\ 0.001n \\ 2 - 0.003n \end{bmatrix}.$$

Visualize this time-varying impulse response using a waterfall plot (MATLAB function `waterfall`).

(d) Assume now, that $\nu[n] = 0$. Generate 1000 samples (for $n = 0 \ldots 999$) of an input signal drawn from a stationary white noise process with zero mean and variance $\sigma_x^2 = 1$. Compute the output $d[n]$ of the system, under the condition that all delay elements are initialized with zeros (i.e., $x[n] = 0$ for $n < 0$).

The adaptive filter has 3 coefficients ($N = 3$). By calling the MATLAB function `ls_filter` with length-M segments of both $x[n]$ and $d[n]$, the coefficients of the adaptive filter $\mathbf{c}[n]$ for $n = 0 \ldots 999$ can be computed. Note, we then obtain $\mathbf{c}[n] = \operatorname{argmin}_{\mathbf{c}} J(\mathbf{c}, n)$ where we may rewrite the cost function as $J(\mathbf{c}, n) = \sum_{k=n-M+1}^{n} |e[k]|^2$. For a segment lengths of $M \in \{20, 50\}$, create plots comparing the elements of the coefficient vector $c_j[n]$ to the elements of the impuls response vector $h_j[n]$. Compare and discuss your results and explain the effects of M.

(e) Repeat task **(d)** for $\nu[n]$ being a zero-mean white noise process with variance $\sigma_\nu^2 = 0.5$.

(f) Repeat task **(d)** for $\nu[n]$ being generated by

$$\nu[n] = \frac{1}{2}\left(x[n] + x[n-1]\right).$$

MATLAB Problem 1.4 (7 Points)—BONUS: A first glance at Steepest Decent

In this task we want to introduce the steepest decent method, which approximates the Wiener solution. The algorithm is defined by the update equation

$$\mathbf{c}[n+1] = \mathbf{c}[n] + \mu(\mathbf{p} + \mathbf{R}\mathbf{c}[n])$$

The cost function is given by

$$J[n] = (\mathbf{c}[n] - \mathbf{R}^{-1}\mathbf{p})^T\mathbf{R}(\mathbf{c}[n] - \mathbf{R}^{-1}\mathbf{p}) \quad .$$

(a) Write a MATLAB function `steepest()` that computes the optimum filter coefficients and the mean-squared error. Below, the header of the function is specified.

```
function[c, J] = steepest(mu, ci, MaxIter, R, p, Jmin)
% mu ... step size
% ci ... initial filter coefficients
% MaxIter ... maximum number of iterations
% R ... autocorrelation matrix
% p ... cross-correlation vector
% Jmin ... minimum mean-squared error
%
% Author: YourNames
% ID: YourMatrNumbers
```

(b) To validate your approach, use an initial coefficient vector $\mathbf{c}[0] = [0\ 0]^T$, different stepsizes μ and include a plot of the filter coefficients over iterations. The autocorrelation matrix is given by

$$\mathbf{R} = \begin{bmatrix} 2 & 1 \\ 1 & 2 \end{bmatrix}$$

and the cross-correlation vector is given by

$$\mathbf{p} = \begin{bmatrix} 6 \\ 4 \end{bmatrix}$$

Let λ_{max} be the maximum eigenvalue of the autocorrelation matrix and investigate what happens if $\mu = \frac{2}{\lambda_{max}}$. Repeat your experiments with 10 different stepsizes uniformly distributed from $\mu_0 = 0.1$ up to $\frac{2}{\lambda_{max}}$.Is ist always possible to reach the optimal coefficients?

(c) Plot the cost function over $MaxIter = 50$ iterations with stepsize of $\mu_{max}/2$ where μ_{max} is the maximum acceptable step size. Describe how the function evolves over iterations. Does the cost function go to zero?