Fund. of Digital Communications Chapter 5: Demodulation, Detection

Klaus Witrisal
witrisal@tugraz.at

Signal Processing and Speech Communication Laboratory
www.spsc.tugraz.at
Graz University of Technology

January 23, 2014

Outline

- 5-1 Correlation-Type Demodulator and Matched Filter
- 5-2 Optimal Detection
- 5-3 Error Probability
- 5-4 Equalization (and Channel Distortions)

- Reference: (Figures taken from these books.)
  - J. G. Proakis and M. Salehi, “Communication System Engineering,” 2nd Ed., Prentice Hall, 2002
  - J. G. Proakis and M. Salehi, “Grundlagen der Kommunikationstechnik,” 2. Aufl., Pearson, 2004 (in German – Achtung! tw. fehlerhafte Übersetzung)

Correlation-type demodulator

- **Channel:** Additive white Gaussian noise (AWGN) is added

$$r(t) = s_m(t) + n(t)$$

- transmitted signal $\{s_m(t)\}, m = 1, 2, ...M$ is represented by N basis functions $\{\psi_k(t)\}, k = 1, 2, ...N$
- received signal $r(t)$ is projected onto these basis functions $\{\psi_k(t)\}$

$$\int_0^T r(t)\psi_k(t)dt = \int_0^T [s_m(t) + n(t)]\psi_k(t)\,dt$$

$$r_k = s_{mk} + n_k, \quad k = 1, 2, ..., N$$

- Output vector in signal space: $\mathbf{r} = \mathbf{s}_m + \mathbf{n}$

Correlation demod. (cont'd)

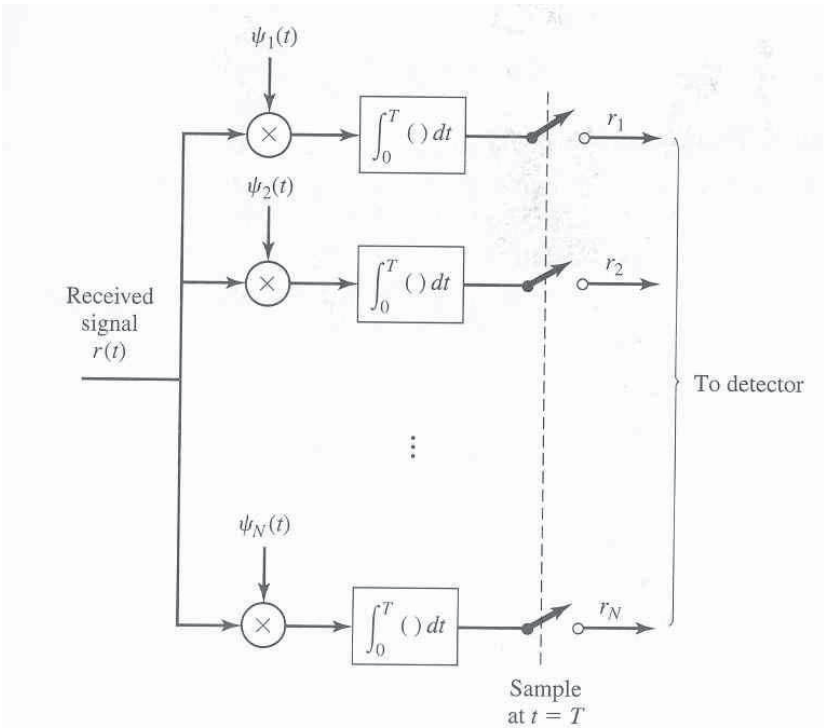

Figure 7.31 Correlation-type demodulator.

[Proakis 2002]

Correlation demod. (cont'd)

- Received signal

$$r(t) = \sum_{k=1}^{N} s_{mk}\psi_k(t) + \sum_{k=1}^{N} n_k\psi_k(t) + n'(t)$$
$$= \sum_{k=1}^{N} r_k\psi_k(t) + n'(t)$$

- Correlator outputs $\mathbf{r} = [r_1, r_2, ...r_N]^T$ are **sufficient statistik** for the decision
  - i.e.: there is **no additional info** in $n'(t)$
  - $n'(t)$ is part of $n(t)$ that is **not representable** by $\{\psi_k(t)\}$
- Interpretation of $\mathbf{r}$: **noise cloud** in signal space

Correlation demod. (cont'd)

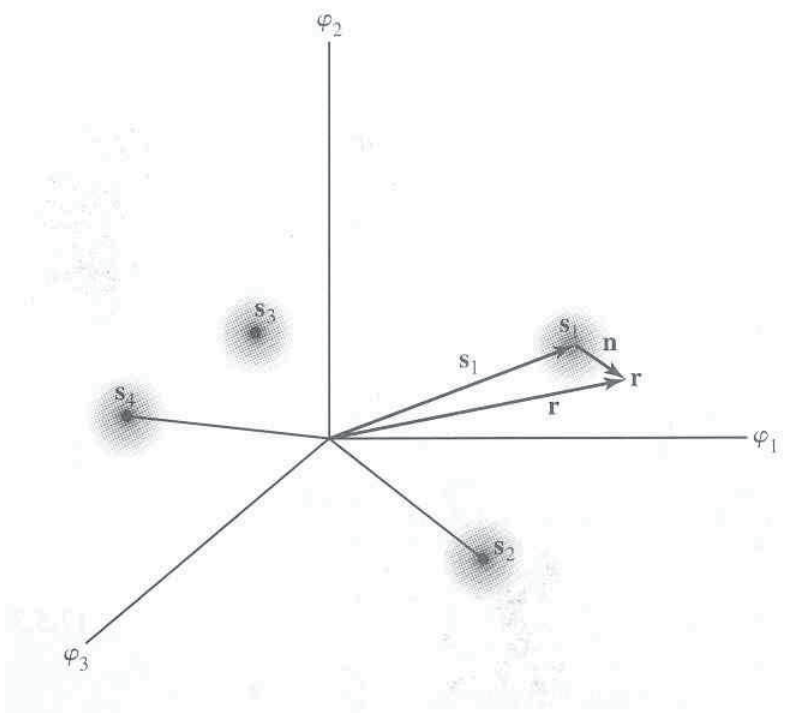

[Proakis 2002]

Correlation demod. (cont'd)

- Characterization of the noise component
  - Mean values

$$\mathrm{E}\{n_k\} = \ldots = \int_0^T \mathrm{E}\{n(t)\}\psi_k(t)\,dt = 0$$

  - Correlations (= covariances, since means = 0)

$$\mathrm{E}\{n_k n_m\} = \ldots = \frac{N_0}{2}\delta[m-k]$$

  - i.e.: N noise components $\{n_k\}$ are **zero-mean, uncorrelated, Gaussian random variables**
  - their variances $\sigma_n^2 = N_0/2$ (because $||\psi_k(t)||^2 = 1$)

Correlation demod. (cont'd)

- Statistics of the correlator outputs $\{r_k\}$
  - Mean values

$$\mathrm{E}\{r_k\} = \mathrm{E}\{s_{mk} + n_k\} = s_{mk}$$

  - Variances (identical)

$$\sigma_r^2 = \sigma_n^2 = N_0/2$$

  - **conditional** PDF; **likelihood function**

$$f(r_k|s_{mk}) = \frac{1}{\sqrt{\pi N_0}} e^{-(r_k - s_{mk})^2/N_0}, \qquad k = 1, 2, \ldots, N$$

$$f(\mathbf{r}|\mathbf{s}_m) = \prod_{k=1}^{N} f(r_k|s_{mk}) \qquad m = 1, 2, \ldots, M$$

Matched Filter Demodulator

- Uses N Filters (instead of the correlators) with impulse responses

$$h_k(t) = \psi_k(T-t), \quad 0 \le t \le T$$

- Filter outputs

$$y_k(t) = \int_0^t r(\lambda) h_k(t-\lambda)\, d\lambda = \ldots$$

- Sampling at $t = T$

$$y_k(T) = \int_0^T r(\lambda)\psi_k(\lambda)\, d\lambda = r_k, \quad k = 1, 2, \ldots, N$$

identical to correlator outputs!

Matched Filter Demodulator (cont'd)

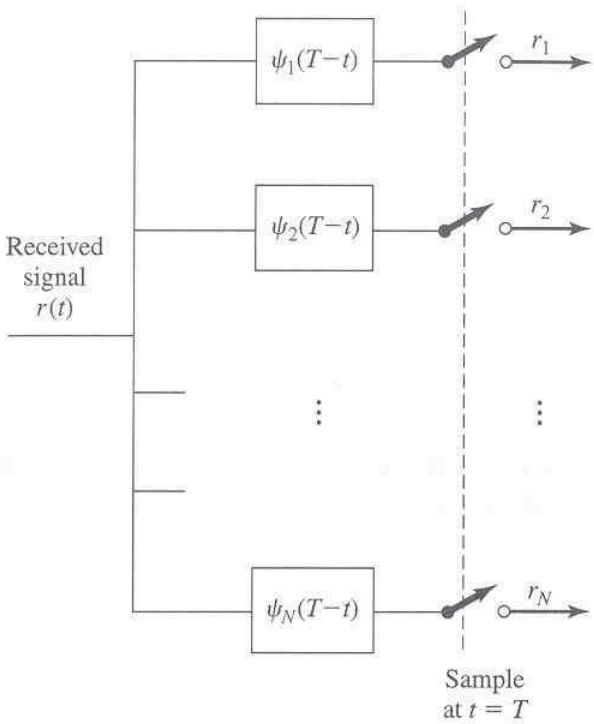

[Proakis 2002]

Matched Filter Demodulator (cont'd)

- Property of the matched filter: **maximization of the output SNR** at sampling time $t = T$
- Derivation: **arbitrary** impulse response $h(t), 0 \leq t \leq T$
  $y(t) = \ldots$
  $y(T) = \ldots$
- Signal-to-noise ratio (SNR)

$$\left(\frac{S}{N}\right)_0 = \frac{y_s^2(T)}{\mathrm{E}\{y_n^2(T)\}}$$

- Maximum SNR is found with Cauchy-Schwarz inequ.

$$h(t) = \boxed{Cs(T-t)} \text{ und } \boxed{\left(\frac{S}{N}\right)_0 = \frac{2\mathcal{E}_s}{N_0}}$$

Matched Filter Demodulator (cont'd)

Derivation of the Matched Filter Demodulator (cont'd)

- SNR of the sampled filter output

$$\left(\frac{S}{N}\right)_0 = \frac{y_s^2(T)}{\mathrm{E}\{y_n^2(T)\}} = \ldots = \frac{[\int_0^T h(\lambda)s(T-\lambda)\,d\lambda]^2}{\frac{N_0}{2}\int_0^T h^2(T-t)\,dt}$$

- denominator is energy of the filter IR $\rightarrow$ hold constant
- maximization of the numerator using Cauchy-Schwarz:

$$\left[\int_{-\infty}^{\infty} g_1(t)g_2(t)\,dt\right]^2 \leq \int_{-\infty}^{\infty} g_1^2(t)\,dt \int_{-\infty}^{\infty} g_2^2(t)\,dt$$

Equality (i.e. maximum) holds for $g_1(t) = Cg_2(t)$

This yields $\boxed{h(t) = Cs(T-t)}$ to obtain max. SNR

5-2 Optimum Detection (= Entscheidung)

- Signal model: **received signal vector** with i.i.d. noise

$$\mathbf{r} = \mathbf{s}_m + \mathbf{n}$$

  - $\mathbf{s}_m$ ... points in N-dimensional signal space
  - $\mathbf{n}$ ... random vector with i.i.d. components $\sim \mathcal{N}(0, N_0/2)$
- **Find:** decision minimizing the error probability, based on the observed vector $\mathbf{r}$
- Solution: **decision rule** based on **a posteriori** probabilities:

$$P(\text{signal } \mathbf{s}_m \text{ was transmitted } |\mathbf{r}) \quad m = 1, 2, ..., M$$

  - choose $\mathbf{s}_m$ that maximizes $P(\mathbf{s}_m|\mathbf{r})$ for $m = 1, 2, ..., M$

Optimum Detection (cont'd)

Maximizing the posterior probability:

- Maximum a posteriori probability (MAP) criterion
- finding the **posterior** probability using Bayes' rule:

$$P(\mathbf{s}_m|\mathbf{r}) = \frac{f(\mathbf{r}|\mathbf{s}_m)P(\mathbf{s}_m)}{f(\mathbf{r})}$$

  - $f(\mathbf{r}|\mathbf{s}_m)$ ... conditional PDF of $\mathbf{r}$ given $\mathbf{s}_m$ was transmitted **(likelihood function)**
  - $P(\mathbf{s}_m)$ ... **a priori** probability
  - PDF $f(\mathbf{r}) = \sum_{m=1}^{M} f(\mathbf{r}|\mathbf{s}_m)P(\mathbf{s}_m)$ is independent of $\mathbf{s}_m$, hence **irrelevant**
- Metrik for MAP criterion: $PM(\mathbf{r}, \mathbf{s}_m) = f(\mathbf{r}|\mathbf{s}_m)P(\mathbf{s}_m)$

Optimum Detection (cont'd)

Maximum Likelihood (ML) Criterion

- equivalent to MAP; **for equal** a priori probabilities

$$P(\mathbf{s}_m) = \frac{1}{M}, \quad \forall m = 1, 2, ..., M$$

- **decision** means finding the largest **(the maximum) likelihood function** $f(\mathbf{r}|\mathbf{s}_m)$ (at the observed point $\mathbf{r}$ by choosing $\mathbf{s}_m$)

Optimum Detection (cont'd)

- ML criterion for AWGN channel (logarithm of $f(\mathbf{r}|\mathbf{s}_m)$):

$$\ln[f(\mathbf{r}|\mathbf{s}_m)] = -\frac{N}{2}\ln(\pi N_0) - \frac{1}{N_0}\sum_{k=1}^{N}(r_k - s_{mk})^2$$

  note: first term is irrelevant; $1/N_0$ too:
  - ML criterion means **minimizing the distance!**

$$D(\mathbf{r}, \mathbf{s}_m) = \sum_{k=1}^{N}(r_k - s_{mk})^2 = ||\mathbf{r} - \mathbf{s}_m||^2$$

  - $D(\mathbf{r}, \mathbf{s}_m)$ ... distance metric
- Equivalently: **maximizing** the **correlation metric**:

$$C(\mathbf{r}, \mathbf{s}_m) = 2\mathbf{r}^T\mathbf{s}_m - ||\mathbf{s}_m||^2$$

Optimum Detection – Example

Given: binary, antipodal PAM

- $s_1(t) = -s_2(t) = g_T(t)$
- $s_1 = -s_2 = \sqrt{\mathcal{E}_b}$ ($\mathcal{E}_b$ ... energy per bit)
- $P(s_1) = p$, $P(s_2) = 1 - p$

Find: metrics for MAP detection in AWGN

- Result: **threshold detection** can be performed!

$$r \gtrless_{s_2}^{s_1} \gamma$$

Optimum Detection – Example (cont'd)

Likelihood functions for binary antipodal PAM:

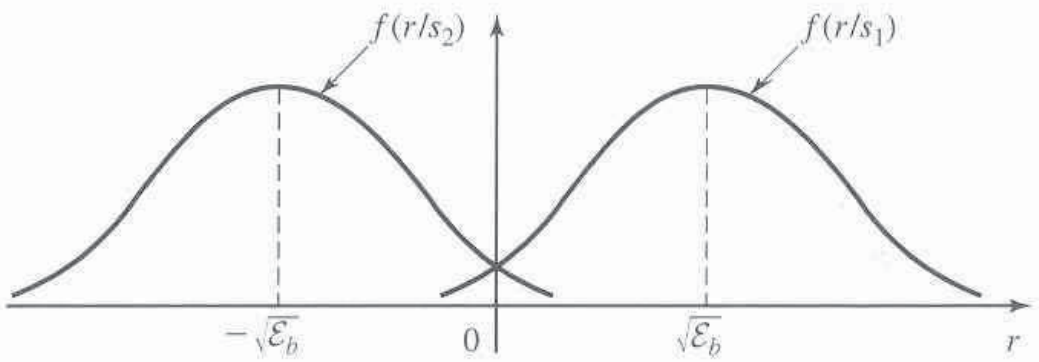

Figure 7.51 Conditional PDF's of two signals.

[Proakis 2002]

5-3 Error Probability

- Assumption: binary antipodal signals with $P(s_1) = P(s_2) = 0.5$ and $s_1 = -s_2 = \sqrt{\mathcal{E}_b}$
- therefore we can use a threshold detector with threshold $\gamma = 0$
- error probability for $s_1(t)$

$$P(e|s_1) = \int_{-\infty}^{0} f(r|s_1)\,dr = \ldots = Q\left(\sqrt{\frac{2\mathcal{E}_b}{N_0}}\right)$$

$Q(x) = \frac{1}{\sqrt{2\pi}} \int_x^\infty e^{-x^2/2}\,dx$ ... integral over Gaussian function

Error Probability (cont'd)

- average error probability per bit:

$$\begin{aligned} P_b &= P(s_1)P(e|s_1) + P(s_2)P(e|s_2) \\ &= \frac{1}{2}P(e|s_1) + \frac{1}{2}P(e|s_2) \\ &= Q\left(\sqrt{2\mathcal{E}_b/N_0}\right) \end{aligned}$$

- using the distance between signal constellations:

$$P_b = Q\left(\sqrt{\frac{d_{12}^2}{2N_0}}\right)$$

holds for **any** binary signals with $P(s_1) = P(s_2) = 0.5$

- e.g. bin. antipodal: $d_{12} = 2\sqrt{\mathcal{E}_b}$; orthogonal: $d_{12} = \sqrt{2\mathcal{E}_b}$

Error Probability (cont'd)

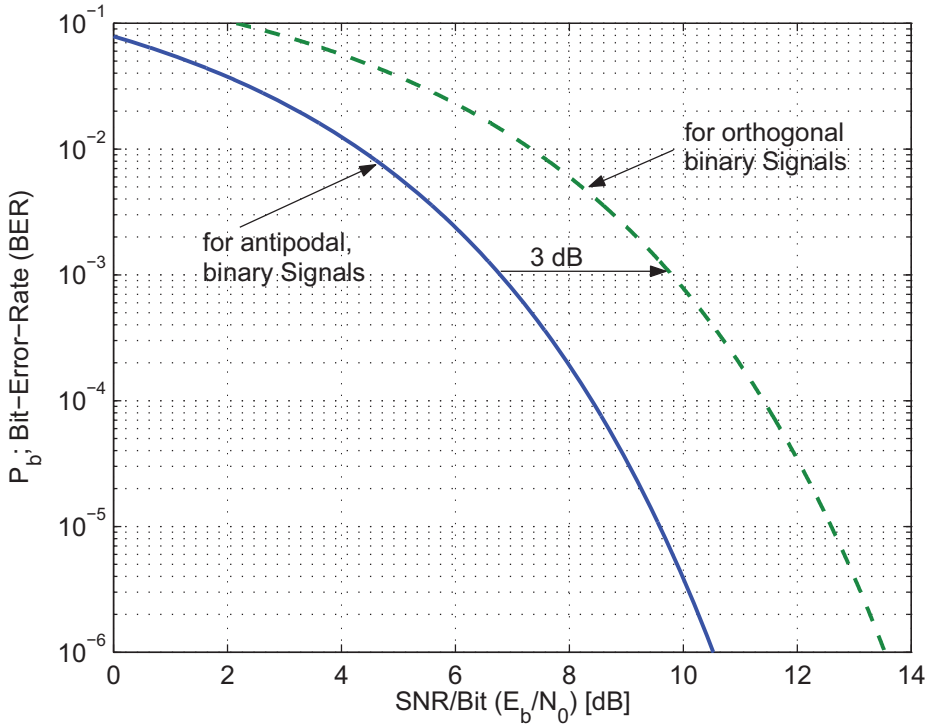

- P_b for antipodal and orthogonal binary signals

Error Probability (cont'd)

- Approximate symbol error rate (SER) for higher-order modulation schemes

$$P_M \approx \overline{N_e} Q\left(\sqrt{\frac{d_{min}^2}{2N_0}}\right)$$

where

- $\overline{N_e}$ ... average number of nearest neighbors (in signal space)
- d_{min} ... (min.) distance to those neighboring signal vectors

Error Probability (cont'd)

- for M-ary PAM

$$\overline{N_e} = 2\frac{M-1}{M}$$

$$d_{min} = 2\sqrt{\frac{3\log_2 M}{M^2-1}}\sqrt{\mathcal{E}_b}$$

$$P_M \approx 2\frac{M-1}{M} \times Q\left(\sqrt{\frac{6\log_2 M}{M^2-1}}\sqrt{\frac{\mathcal{E}_b}{N_0}}\right)$$

- BER for Gray coding
  $P_b \approx P_M/k$

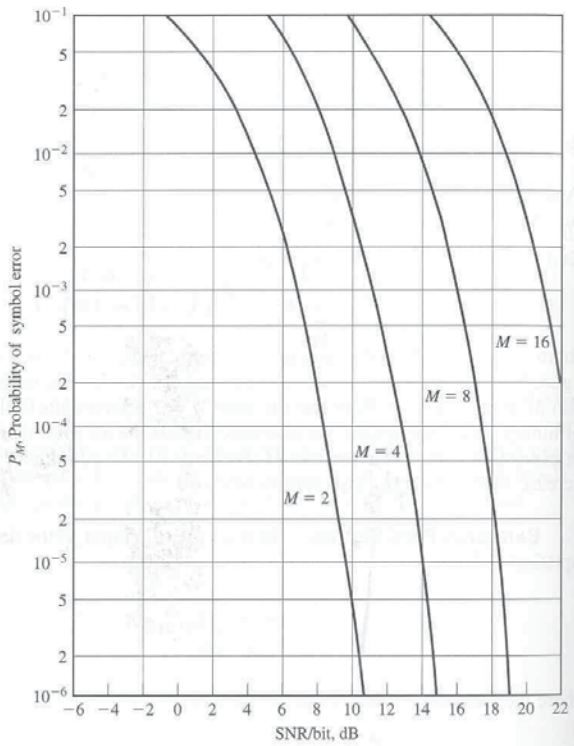

Figure 7.55 Probability of a symbol error for PAM.

Error Probability (cont'd)

- for M-ary PSK

$$\overline{N_e} = 2$$

$$d_{min} = 2\sqrt{\mathcal{E}_s}\sin\frac{\pi}{M} = 2\sqrt{k\mathcal{E}_b}\sin\frac{\pi}{M}$$

$$P_M \approx 2Q\left(\sqrt{\frac{2k\mathcal{E}_b}{N_0}}\sin\frac{\pi}{M}\right)$$

- BER for Gray coding
  $P_b \approx P_M/k$

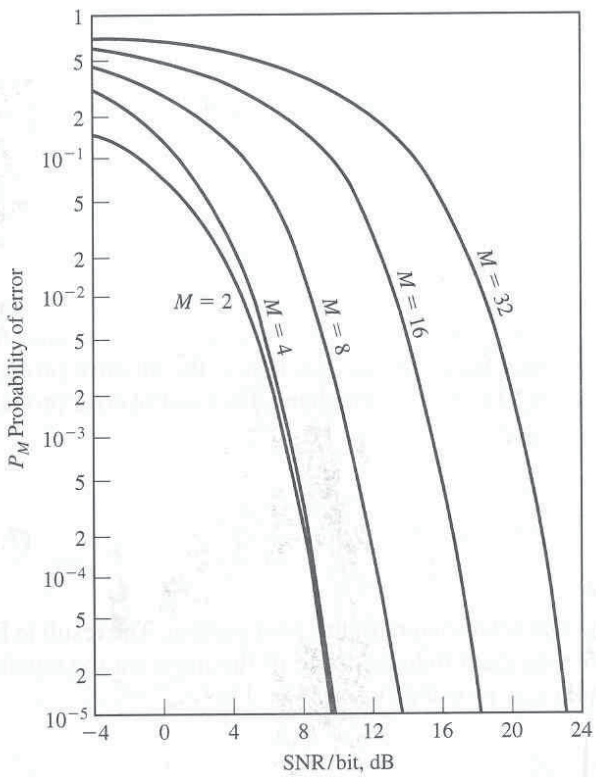

Error Probability (cont'd)

- for M-ary orthogonal sign.

$$\overline{N_e} = M - 1$$

$$d_{min} = \sqrt{2\mathcal{E}_s} = \sqrt{2k\mathcal{E}_b}$$

$$P_M \leq (M-1)Q\left(\sqrt{\frac{k\mathcal{E}_b}{N_0}}\right)$$

- Upper bound:

$$P_M < e^{-k(\mathcal{E}_b/N_0 - 2\ln 2)/2}$$

i.e. $P_M \to 0$ for $k \to \infty$ if $\mathcal{E}_b/N_0 > 2\ln 2 = 1.4$ dB

- in fact: $\mathcal{E}_b/N_0 > -1.6$ dB sufficient: **Shannon limit**

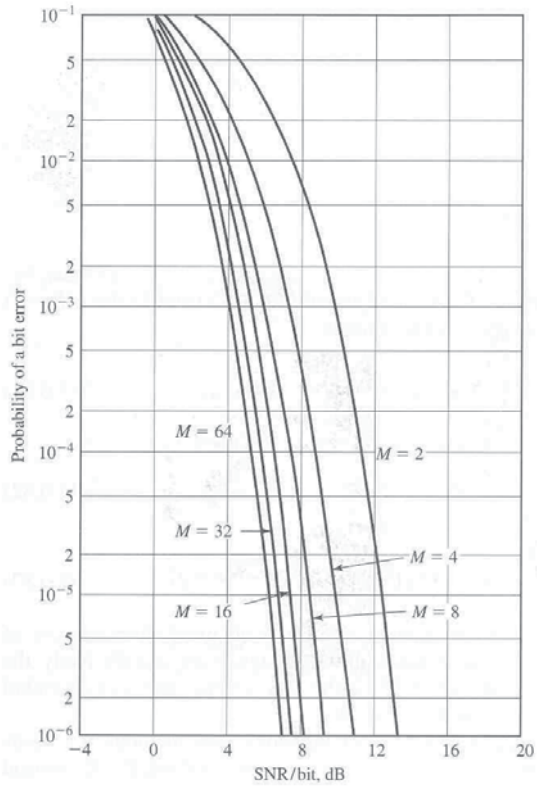

Comparison of modulation schemes:

- shows R/W: transmission rate normalized with bandwidth
- as a function of SNR per bit: $\mathcal{E}_b/N_0$
- to reach SER of 10^{-5}
- **Shannon limit** is approached for orthogonal signals if $k \to \infty$

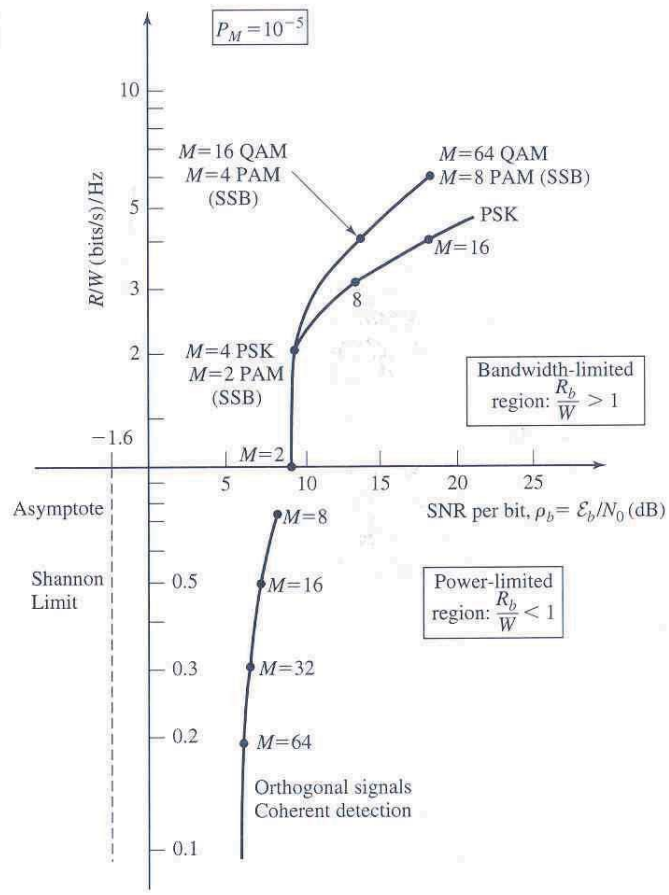

Figure 7.66 Comparison of several modulation methods at 10^{-5} symbol error probability.

[Proakis 2002]

Channel Capacity

[Proakis02, Sec. 9.3]

- **Channel capacity** for AWGN channel (Shannon)

$$C = W \log_2 \left(1 + \frac{P}{N_0 W}\right)$$

  - C ... channel capacity [bit/s]
  - W ... bandwidth [Hz]
  - P ... signal power [W]
  - N_0 ... noise PSD [W/Hz]
- **increase power** $P \rightarrow$ (slow) increase of capacity
- no limit but lots of power required

Channel Capacity (cont'd)

- **increase bandwidth** W
- at fixed power P

$$C = W \log_2 \left(1 + \frac{P}{N_0 W}\right)$$

- consider limit $W \rightarrow \infty$

$$\lim_{W \rightarrow \infty} C = \frac{P}{N_0} \log_2 e = 1.44 \frac{P}{N_0}$$

- there is a **hard limit**
- need to increase P too

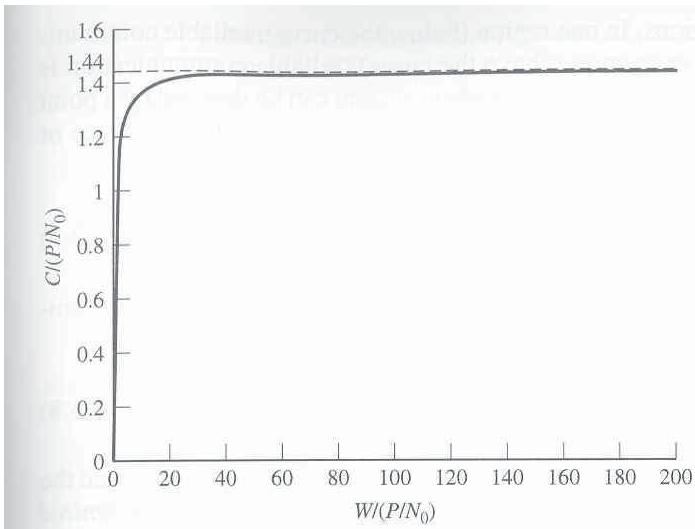

Channel Capacity (cont'd)

- **in practice** we must have $R < C$

$$R < W \log_2 \left(1 + \frac{P}{N_0 W}\right)$$

define

- $r = R/W$ "spectral rate"
- $\mathcal{E}_b = P/R$ energy per bit

we obtain

$$\boxed{r < \log_2 \left(1 + r\frac{\mathcal{E}_b}{N_0}\right)}$$

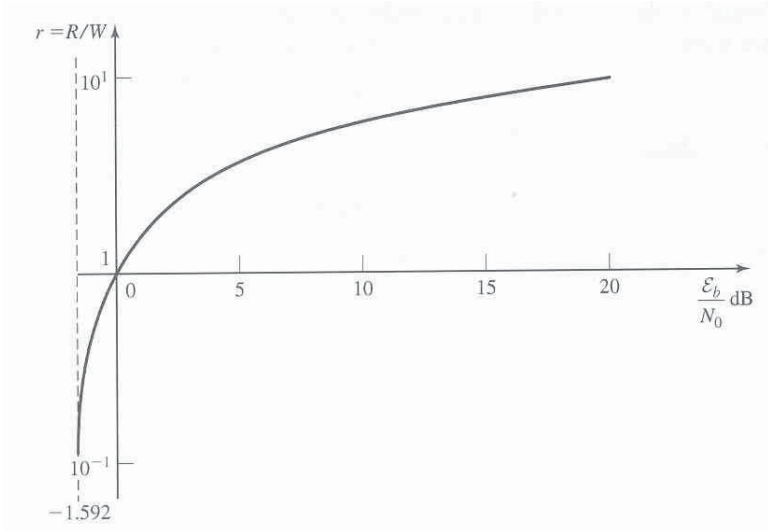

Figure 9.11 Spectral bit rate versus SNR/bit in an optimal system.

5-4 Equalization

[Proakis 2002, Section 8.6]

- **Nyquist criterion** must be fulfilled for ISI-free transmission
- Cascade of linear filters

$$G_T(f)C(f)G_R(f) = X_{rc}(f)$$

- $X_{rc}(f)$ ... Fourier transform of raised-cosine pulse **(ISI free!)**

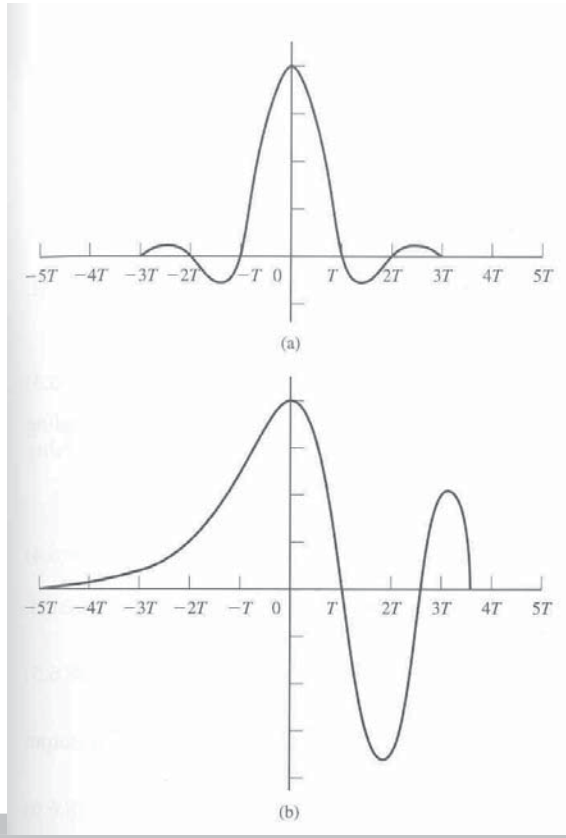

Channel Distortion (cont'd)

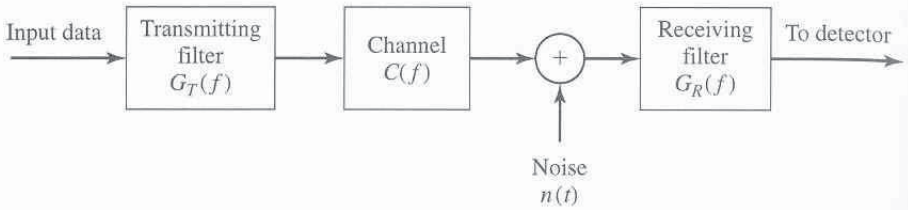

Figure 8.34 System configuration for design of $G_T(f)$ and $G_R(f)$.

Design considerations; assume channel $C(f)$ known

- Cascade $G_T(f)C(f)G_R(f) = X_{rc}(f)$ fulfills Nyquist
- Noise $n(t)$ is AWGN (flat spectrum)

→ Receiver filter $G_R(f)$ should be **matched to** cascade $G_T(f)C(f)$

$$G_T(f) = \frac{\sqrt{X_{rc}(f)}}{C(f)} e^{-j2\pi f t_0} \qquad G_R(f) = \sqrt{X_{rc}(f)} e^{-j2\pi f t_r}$$

Equalization

- Channel is **unknown** or changes with time
  - e.g. telephone channel – routing changes
  - e.g. mobile radio – multipath propagation

→ design $G_T(f)$ and $G_R(f)$ as for AWGN channel: **root raised cosine** frequency response

$$G_T(f) = \sqrt{X_{rc}(f)} e^{-j2\pi f t_0} \qquad |G_R(f)| \cdot |G_T(f)| = X_{rc}(f)$$

- Output of receiver filter

$$r(t) = y(t) + n(t) = \sum_{k=-\infty}^{\infty} a[k] x(t - kT) + n(t)$$

$a[k] \in \{a_m\}_{m=1}^{M}$ ... PAM (or QAM) symbols
$x(t) = g_T(t) * c(t) * g_R(t)$ ... cascaded system response

Equalization (cont'd)

- Equivalent output with **periodic sampling**:
  $y[k] = y(kT) = \sum_{l=-L_1}^{L_2} x_l a[k-l]$ (noise-free)
  $x_k = x(kT)$ ... equiv. **FIR** discrete-time channel filter

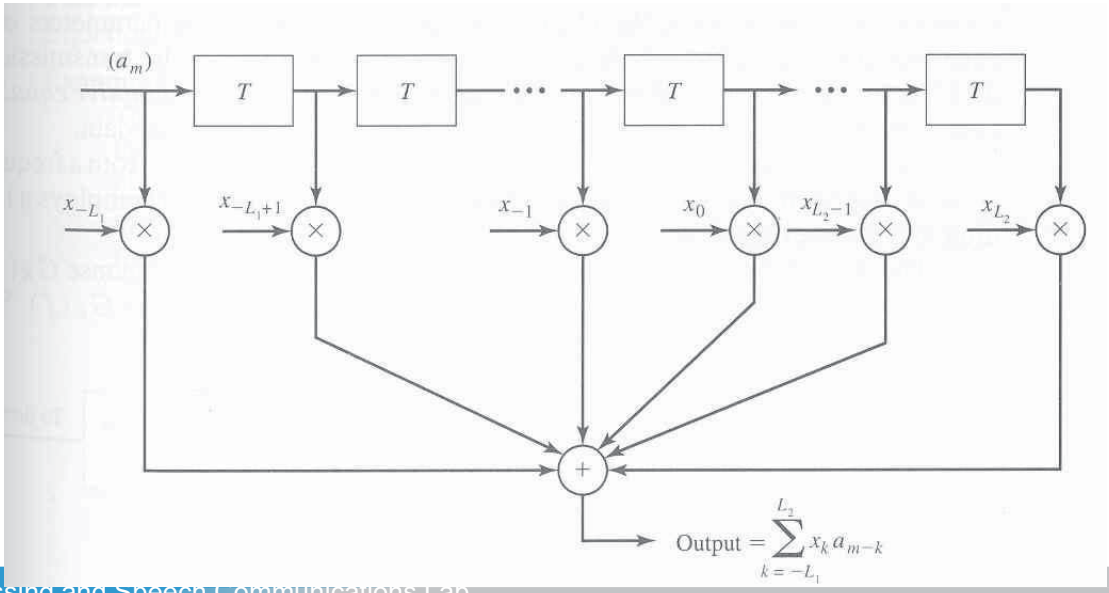

Equalization (cont'd)

Maximum likelihood sequence detection (MLSD)

- **optimum** detector (for AWGN: $r[k] = y[k] + n[k]$):
  choose information sequence $\mathbf{a} := \{a[k]\}_{k=1}^{K}$
  based on the received sequence $\mathbf{r} := \{r[k]\}_{k=1}^{K+L-1}$
  - each $a[k] \in \{a_m\}_{m=1}^{M}$,
    hence there are M^K possible sequences $\{\mathbf{a}^{(m)}\}_{m=1}^{M^L}$
  - joint likelihood function: (w/ $y^{(m)}[k] = a^{(m)}[k] * x_k$)

$$f(\mathbf{r}|\mathbf{a}^{(m)}) = \prod_{k=1}^{K+L-1} f(r[k]|a^{(m)}[k])$$

$$= \prod_{k=1}^{K+L-1} \frac{1}{\sqrt{\pi N_0}} e^{(r[k]-y^{(m)}[k])^2/N_0}$$

Maximum likelihood sequence detection (MLSD) (cont'd)

joint likelihood function (cont'd):

$$f(\mathbf{r}|\mathbf{a}^{(m)}) = \frac{1}{(\pi N_0)^{\frac{K+L}{2}}} \exp\left[-\frac{1}{N_0}\sum_{k=1}^{K+L-1}(r[k]-y^{(m)}[k])^2\right]$$

equivalent distance metric (squared distance)

$$D(\mathbf{r},\mathbf{a}^{(m)}) = \sum_{k=1}^{K+L-1}(r[k]-y^{(m)}[k])^2; \quad y^{(m)}[k] = \sum_{l=-L_1}^{L_2} x_l a^{(m)}[k-l]$$

- **MLSD:** channel $\{x_k\}$ is known; find for $m = 1, 2, ..., M^K$

$$\hat{m} = \arg\max_m f(\mathbf{r}|\mathbf{a}^{(m)}) = \arg\min_m D(\mathbf{r},\mathbf{a}^{(m)})$$

Viterbi (MLSD)

can be done sequentially using the **Viterbi algorithm**

- distances are computed recursively: $D(\mathbf{r}_{(1:k)}, \mathbf{a}^{(m)}_{(1:k)}) = D(\mathbf{r}_{(1:k-1)}, \mathbf{a}^{(m)}_{(1:k-1)}) + (r[k] - \sum_{l=-L_1}^{L_2} x_l a^{(m)}[k-l])^2$
- Complexity:
  - symbols $a[k]$ are M-ary PAM symbols
  - FIR channel has memory $L-1 = L_1 + L_2$
  - $\rightarrow$ compute M^L branch metrics **at each stage** k, yielding M^{L-1} surviving sequences (trellis diagram)
  - $\rightarrow$ complexity: $(K+L-1)M^L$ (scales linearly with K)
- while $M^L \ll M^K$, still M and L **must be small!**

Viterbi example (MLSD)

- Channel model; $L = 2$ (1 memory); $M = 2$ (binary)

$$r[k] = x_0 a[k] + x_1 a[k-1] + n[k]; \qquad a[k] \in \{-1, +1\}$$

  - state variable (memory) $a[k-1] \in \{-1, +1\}$
- information sequence: $\{a[k]\}_{k=1}^{K} = \mathbf{a}$; each $a[k] \in \{\pm 1\}$; i.e. 2^K possible sequences denoted $\mathbf{a}^{(m)}$
- observation sequence: $\{r[k]\}_{k=1}^{K+1} = \mathbf{r}$
- likelihood functions (for $m = 1, ..., M^K$)

$$f(\mathbf{r}|\mathbf{a}^{(m)}) \propto \exp\left[-\frac{1}{N_0}\sum_{k=1}^{K+1}(r[k] - x_0 a^{(m)}[k] - x_1 a^{(m)}[k-1])^2\right]$$

Viterbi example (MLSD) (cont'd)

- MLSD maximizes likelihood fct. by testing any $\mathbf{a}^{(m)}$, which is equivalent to minimizing:
  $D(\mathbf{r}, \mathbf{a}^{(m)}) = \sum_{k=1}^{K+L-1}(r[k] - x_0 a^{(m)}[k] - x_1 a^{(m)}[k-1])^2$
- at stage k

$$\begin{aligned} D(\mathbf{r}_{(1:k)}, \mathbf{a}^{(m)}_{(1:k)}) &= \sum_{l=1}^{k-1}(r[l] - x_0 a^{(m)}[l] - x_1 a^{(m)}[l-1])^2 \\ &\quad + (r_k - x_0 a^{(m)}[k] - x_1 a^{(m)}[k-1])^2 \\ &= D(\mathbf{r}_{(1:k-1)}, \mathbf{a}^{(m)}_{(1:k-1)}) + \text{branch metric} \end{aligned}$$

- Viterbi requires:
  - $M^L = 2^2 = 4$ branch metrics at each state
  - $M^{L-1} = 2^1 = 2$ surviving paths at each state

$\rightarrow$ $(K+1)4 \ll M^K = 2^K$ metric computations

Linear Equalizers

- Use linear filters to **compensate for channel distortion**
- filter has adjustable parameters
  - **preset equalizers:** measure channel; set parameters
  - **adaptive equalizers:** update parameters during data transmission

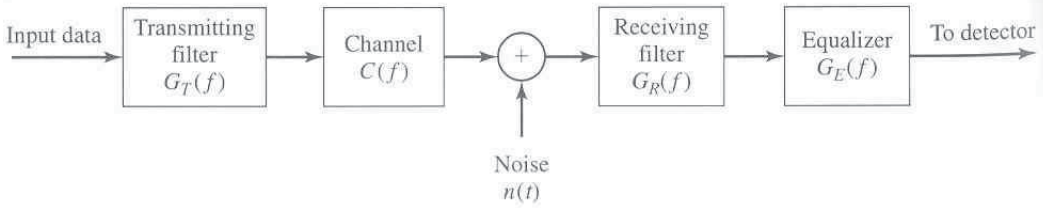

Figure 8.36 Block diagram of a system with an equalizer.

Zero-Forcing Linear Equalizer

How to select equalizer $G_E(f)$?

- $G_R(f)$ is matched to $G_T(f)$ to fulfill zero-ISI
- Hence $G_E(f)$ must compensate channel distortion

$$G_E(f) = \frac{1}{C(f)} = \frac{1}{|C(f)|} e^{-j\Theta_c(f)}$$

$\rightarrow$ **inverse channel filter**

- **forces ISI to zero** (at sampling times)
  detector input: $r[k] = y[k] + n[k]$
- noise variance (for AWGN); **noise gain!**

$$\sigma_n^2 = \int_{-\infty}^{\infty} S_n(f)|G_R(f)|^2|G_E(f)|^2 df = \frac{N_0}{2}\int_{-W}^{W} \frac{|X_{rc}(f)|}{|C(f)|^2} df$$

Linear transversal filter

Practical **implementation** of the linear equalizer

- use **FIR filter with adjustable taps** $\{c_n\}$
- delays τ: $\tau = T$ ... symbol spaced; aliasing, if $1/T < 2W$
- $\tau < T$ ... fractionally-spaced equalizer (often: $\tau = T/2$)

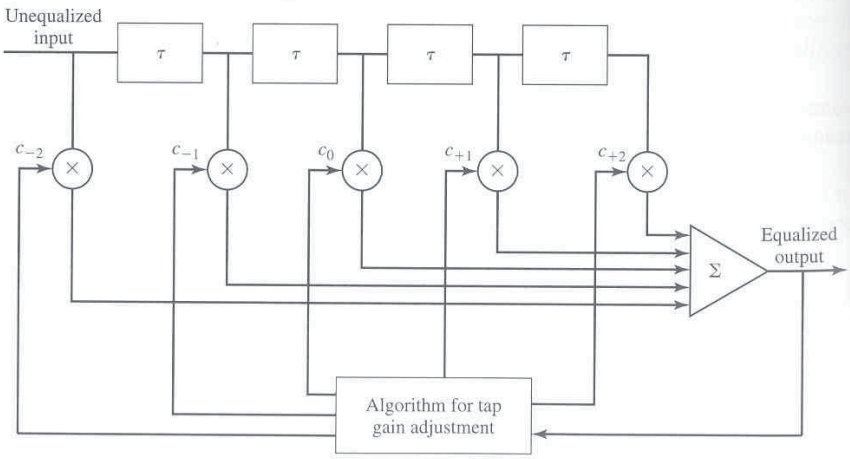

Figure 8.37 Linear transversal filter.

Zero-Forcing Equalizer (cont'd)

How to determine taps $\{c_n\}$ for the zero-forcing equalizer?

- **Equalized output pulse**

$$q(t) = \sum_{n=-N}^{N} c_n x(t - n\tau)$$

for $x(t) = g_T(t) * c(t) * g_R(t)$; number of taps $2N + 1 \geq L$

- **enforce zero-ISI** at sampled output:

$$q(kT) = \sum_{n=-N}^{N} c_n x(kT - n\tau) = \begin{cases} 1, & k = 0 \\ 0, & k = \pm 1, \pm 2, ..., \pm N \end{cases}$$

- **system of** $2N + 1$ **linear equations:** $\mathbf{q} = \mathbf{X}\mathbf{c}$
  for coefficients $\{c_n\} \rightarrow$ approx. solution $\mathbf{c} = \mathbf{X}^{\dagger}\mathbf{q}$

Minimum mean-square-error equalizer

- ZF equalizer **ignores noise!** $\rightarrow$ noise gain
- solution:
  - relax zero-ISI condition
  - consider residual ISI plus noise at equalizer output

$\rightarrow$ use **minimum mean-square-error (MMSE)** criterion

- sampled equalizer output

$$z(kT) = \sum_{n=-N}^{N} c_n r(kT - n\tau) = \mathbf{c}^T \mathbf{r}[k]$$

- mean-square-error (MSE)

$$\mathrm{MSE} = E\{(z(kT) - a[k])^2\} = E\{(\mathbf{c}^T \mathbf{r}[k] - a[k])^2\}$$

MMSE equalizer (cont'd)

Find the equalizer $\mathbf{c}$ that minimizes the MSE

$$\begin{aligned} E\{[\mathbf{c}^T \mathbf{r}[k] - a[k]]^2\} &= E\{[\mathbf{c}^T \mathbf{r}[k] - a[k]][\mathbf{r}^T[k]\mathbf{c} - a[k]]\} \\ &= E\{\mathbf{c}^T \mathbf{r}[k]\mathbf{r}^T[k]\mathbf{c}\} - 2E\{\mathbf{c}^T \mathbf{r}[k]a[k]\} + E\{a[k]^2\} \\ &= \mathbf{c}^T \mathbf{K}_\mathbf{r} \mathbf{c} - 2\mathbf{c}^T \mathbf{k}_{a\mathbf{r}} + E\{a[k]^2\} \end{aligned}$$

- with $\mathbf{K}_\mathbf{r} = E\{\mathbf{r}[k]\mathbf{r}^T[k]\}$ and $\mathbf{k}_{a\mathbf{r}} = E\{\mathbf{r}[k]a[k]\}$
- **minimization:** find derivative with $\mathbf{c}$; set to zero

$$\mathbf{K}_\mathbf{r}\mathbf{c} - \mathbf{k}_{a\mathbf{r}} = \mathbf{0} \quad \rightarrow \quad \mathbf{c} = \mathbf{K}_\mathbf{r}{}^{-1}\mathbf{k}_{a\mathbf{r}}$$

- correlation matrix $\mathbf{K}_\mathbf{r}$ and correlation sequence $\mathbf{k}_{a\mathbf{r}}$ **must be estimated** $\rightarrow$ training sequences

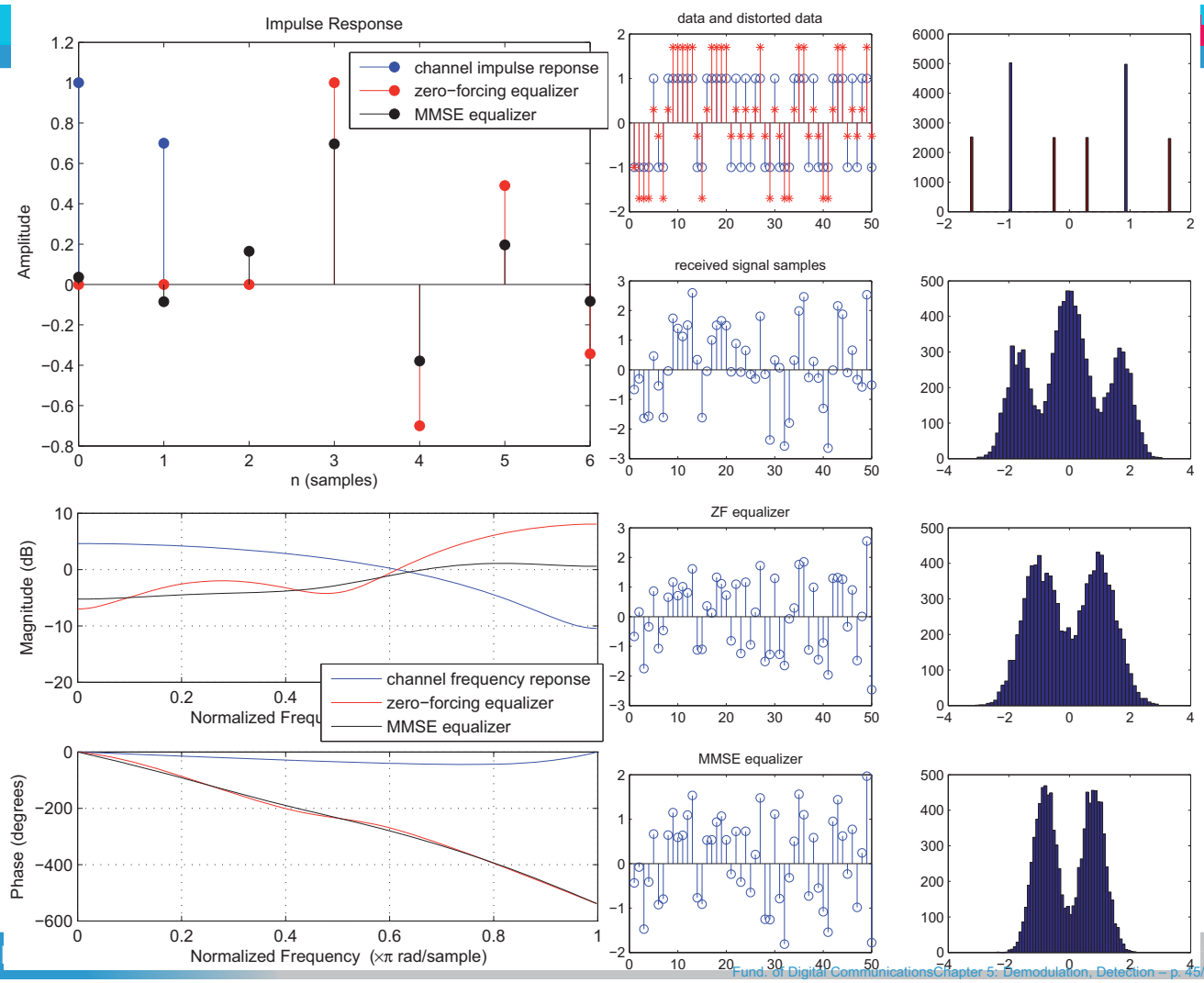

Adaptive equalizers

- perform the MMSE equalization recursively
- search along gradient for MSE (e.g. LMS algorithm)
- discussed in detail in **VL: Adaptive Systems**